SPDT 100 W CW / 631 W peak T/R Switch 0.7 GHz to 2.7 GHz

Not recommended for new designs. This datasheet is provided for archiving purposes. Please replace the TS7029N with the TagoreTech **TS8029N** (500 MHz to 5.0 GHz, 100 W CW, 631 W peak): TS8029N product page, TS8029N datasheet.

Features

- Frequency Range 700 MHz to 2.7 GHz
- Low TX insertion loss: 0.40 dB @ 800 MHz
- High isolation: 50 dB @ 800 MHz
- 631 W peak power handling
- Tuning inductor pins for an isolation notch
- No external DC blocking capacitors on RF lines
- Versatile 2.6 V – 5.5 V power supply
- No need to supply negative voltages

Applications

- Cellular infrastructure
- Small cells
- Macrocells
- ADS-B, IFF systems

General Description

The TS7029N is an asymmetrical reflective Single Pole Double Throw (SPDT) switch designed for broadband, high power switching applications. With a simple broadband match, the TS7029N can cover 700 MHz to 2.7 GHz and provide low insertion loss, high isolation and high linearity within a small package size. TS7029N is an excellent switch for all applications requiring low insertion loss, high isolation and high linearity within a small package size.

The TS7029N is housed in a compact $5.0 \times 5.0\,mm^2$ 32-lead Quad Flat No-lead (QFN) plastic package.

The TS7029N is not recommended for new designs; please consider the TS8029N.

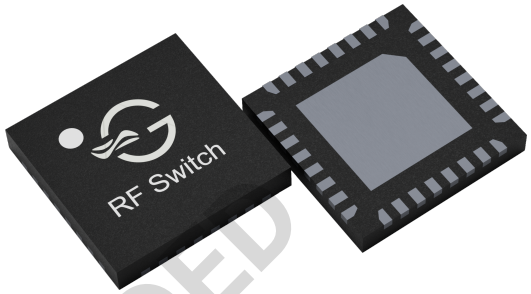

Figure 1: TS7029N in 5.0 x 5.0 mm^2 QFN 32-pin package.

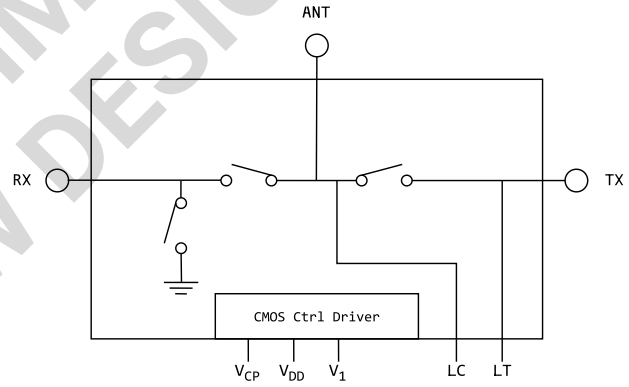

Figure 2: TS7029N functional diagram

RoHS10/REACH/Halogen free

NOT RECOMMENDED FOR NEW DESIGNS

For new designs, please consider TagoreTech **TS8029N** (TS8029N datasheet).

Scan for the TS8029N datasheet

Contents

Features 1
Applications 1
General Description 1
Ordering information 3
Pin Assignment 4
Absolute Maximum Ratings 5
Electrical Specifications 6
Switching time definition . . . 8
Switch Control table 9
Theory of Operation 10
Asymmetrical switch topology . . . 10
Tuning inductor and tuning capacitors . . . 10
Application Information 10
Schematics and Evaluation Board 11
Typical characteristics 12
Typical characteristics, tuned 1.2 to 1.4 GHz . . . 12
Typical characteristics, tuned 2.3 to 2.7 GHz . . . 13
Device Package information 14
PCB Land Design 16
PCB Stencil Design 17
Tape and Reel Information 18
Glossary 19
Changelog . . . 19
Legal Information 20
Published by . . . 20
Legal Disclaimer . . . 20
Sales Contact . . . 20
Recommended replacement: TS8029N . . . 20
TS7029N Product Information . . . 20
TagoreTech Inc. Product Brochure and datasheets . . . 20

NOT RECOMMENDED FOR NEW DESIGNS

©2024-2026 TagoreTech Inc.

Ordering information

Table 1: Ordering Information

Device Part Number	Package Type	Notes
TS7029N	32-Pin 5.0x5.0x0.85 mm^3 QFN	Core part number, not recommended for new designs
TS7029N-EVB	Evaluation Board	
TS7029NMTRPBF[1]	330 mm reel, 1 000 pcs	Full reel

[1] MTRPBF - M: Manufacturing, TR: Tape and Reel, and PBF: lead free.
The TS7029N is not recommended for new designs; please consider the TS8029N.

Table 2: Tape and Reel Information

Form	Quantity	Reel Diameter	Reel Width
Tape and Reel	1 000	13” (330mm)	18mm

NOT RECOMMENDED FOR NEW DESIGNS

©2024-2026 TagoreTech Inc.

Pin Assignment

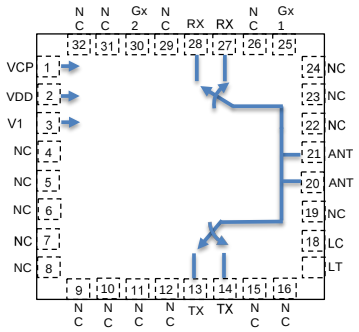

Figure 3: TS7029N pin assignment [top view]

Table 3: Pin Definition

Pin Number	Pin Name	Description
1	V_{CP}	Internal charge pump voltage output. Connect a 1 nF capacitor to GND on this pin to improve switching time.
2	V_{DD}	DC Power Supply
3	V_1	Switch control input 1
13, 14	TX	TX port
20, 21	ANT	Antenna port
27, 28	RX	RX port
17, 18	LT, LC	Tuning inductor[3]
25, 30	Gx1, Gx2	Tuning capacitors for isolation
12, 15, 19, 22, 26, 29	NC	No internal connection. Must be left open
4–11, 16, 23, 24, 31, 32	NC	No internal connection, can be grounded[2]
33 [1]	GND	Ground thermal pad, please connect to GND

[1] The backside ground (thermal) pad of the package must be grounded directly to the ground plane of PCB with multiple vias, and adequate heat sinking must be used to ensure proper operation and thermal management.
[2] These pins are NC pins inside the package. To avoid floating pins around RF lines, we request these to be connected to ground.
[3] An external inductor L_T between pins 17 and 18 creates a notch in the isolation curve, see Theory of Operation.

NOT RECOMMENDED FOR NEW DESIGNS

©2024-2026 TagoreTech Inc.

Absolute Maximum Ratings

Table 4: Absolute Maximum Ratings $T_A = +25$°C unless otherwise specified[1].

Parameter	Symbol	Value	Unit
Electrical Ratings			
Power Supply Voltage	V_{DD}	2.6 – 5.5	V
Storage Temperature Range	T_{st}	−55 – 125	°C
Operating Temperature Range	T_{op}	−40 – 85	°C
Maximum Junction Temperature	T_j	+140	°C
RF input power CW, $T_{case} = +85$°C, 800 MHz	TX / ANT	80	W
RF input power peak, $T_{case} = +85$°C, 800 MHz, 10 % duty cycle, 10 ms pulse width	TX / ANT	400	W
RF input power CW, $T_{case} = +85$°C, 2.6 GHz	TX / ANT	70	W
RF input power peak, $T_{case} = +85$°C, 2.6 GHz, 1 % duty cycle, 10 μs pulse width	TX / ANT	500	W
Thermal Ratings			
Thermal Resistance (junction-to-case) – Bottom side	$R_{\theta jc}$	4.0	°C/W
Soldering Temperature	T_{solder}	+260	°C
ESD Ratings			
Human Body Model (HBM)	Level 1B	500 – <1000	V
Charged Device Model (CDM)	Level C3	≥1000	V
Moisture Rating			
Moisture Sensitivity Level[2]	MSL	1	

[1] Maximum ratings are absolute ratings. Exposure to absolute maximum rating conditions for extended periods may affect device reliability and can cause permanent damage to the device. Exceeding one or a combination of the absolute maximum ratings may cause permanent and irreversible damage to the device and/or to surrounding circuit. Functional operation of the device is not implied in any conditions above those indicated in the Electrical Specifications section.

[2] Tagore recommends to store parts in moisture barrier bag to preserve solderability.

NOT RECOMMENDED FOR NEW DESIGNS

©2024-2026 TagoreTech Inc.

Electrical Specifications

NOT RECOMMENDED FOR NEW DESIGNS

Table 5: Electrical Specifications $T_A = +25°C; V_{DD} = +2.7V; 50\Omega$ Source/Load.

Parameter	Condition	Minimum	Typical	Maximum	Unit
Operating frequency[1]	f	700		2700	MHz
Insertion loss, TX	800 MHz		0.40	0.55	dB
$ANT - TX$	1400 MHz		0.50		dB
	2600 MHz		0.65		dB
Insertion loss, RX	800 MHz		0.75	0.90	dB
$ANT - RX$	1400 MHz		0.90		dB
	2600 MHz		1.00		dB
Isolation	800 MHz	17	22		dB
$ANT - TX$	1400 MHz		25		dB
	2600 MHz		27		dB
Isolation	800 MHz	45	50		dB
$ANT - RX$	1400 MHz		50		dB
	2600 MHz		55		dB
Return loss, RX	800 MHz		-25		dB
	1400 MHz		-20		dB
	2600 MHz		-27		dB
Return loss, TX	800 MHz		-20		dB
	1400 MHz		-18		dB
	2600 MHz		-25		dB
H_2	800 MHz, $P_{in} = 35$ dBm		-70		dBc
H_3	800 MHz, $P_{in} = 35$ dBm		-75		dBc
IIP3	800 MHz		60		dBm

[1] No external DC blocking capacitors are required on RF pins unless DC voltage is applied on a RF pin.

©2024-2026 TagoreTech Inc.

Table 6: Electrical Specifications $T_A = +25°C; V_{DD} = +2.7V; 50\Omega$ Source/Load.

Parameter	Condition	Minimum	Typical	Maximum	Unit
Power and Compression point					
$P_{0.1dB}$ CW[1]	800 MHz		100		W
$P_{0.1dB}$ peak[1]	800 MHz, 1% duty cycle, 10 μs pulse width		631		W
$P_{0.1dB}$ peak[1]	800 MHz, 15% duty cycle, 1.5 ms pulse width		450		W
$P_{0.1dB}$ CW[1]	2600 MHz		90		W
$P_{0.1dB}$ peak[1]	2600 MHz, 1% duty cycle, 10 μs pulse width		550		W
Switching Time					
t_{SW}	50% ctrl to 10% / 90% of RF value, $C_{VCP} = 1$ nF		2.2		μs
Power Supply, DC					
Control voltage	Power Supply V_{DD}	2.6	3.3	5.5	V
	Control pin high[2], V_{ih}	1.0	3.3	5.25	V
	Control pin low, V_{il}	-0.3		0.5	V
Control current	Control pin high, I_{ih}			7.5	μA
	Control pin low, I_{il}		0		μA
Current consumption	I_{DD}, active mode (V_{DD} on)		160	200	μA

[1] $P_{0.1dB}$ is a figure of merit.
[2] Control voltage V_{ih} cannot be higher than V_{DD} (to avoid forward biasing of ESD diode)

NOT RECOMMENDED FOR NEW DESIGNS

©2024-2026 TagoreTech Inc.

Switching time definition

Example of the definition by using 10 W/40 dBm signal. We apply 10W signal to RF port, stabilized with isolator. Isolator is needed as our switch shows to RF port approximately 4Ω impedance. Let's assume that the switch insertion loss is 0.3 dB. Therefore 90% of the RF signal is 39.55 dBm and 10% of the RF signal is 1W/30dBm. We need to take into account 0.3dB insertion loss, therefore numbers are 39.25 dBm and 29.7 dBm respectively. We change the control from low to high and our time reference point is when our control signal exceeds lower threshold value V_{ihlow}. In certain measurements when control signal rise time is significantly shorter than RF output signal, we approximate start of the clock with 50% point of the control signal.

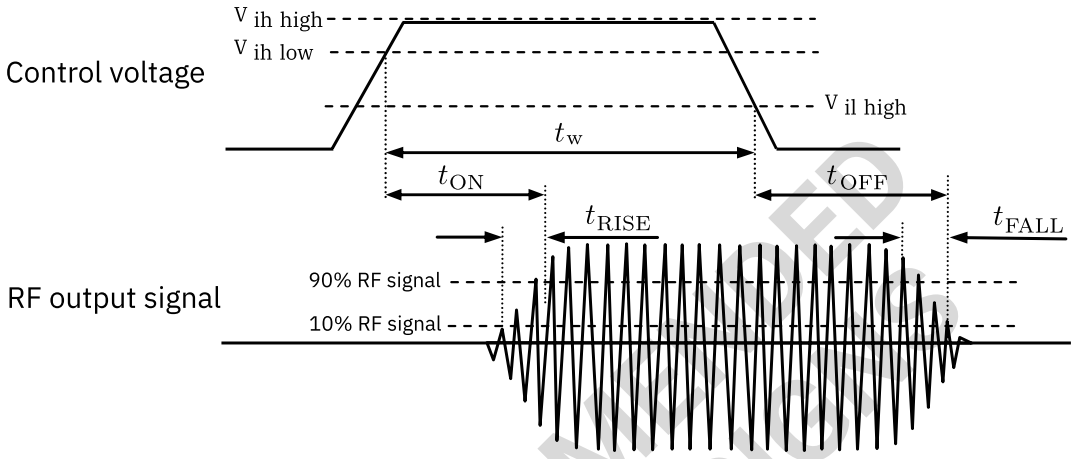

Figure 4: Switching time definition, t_{ON}, t_{OFF}, t_{RISE}, t_{FALL}. Minimum pulse width t_w.

Our component uses integrated charge pump. The switching times of the TS7029N are given with $C_{VCP} = 1$ nF on the V_{CP} pin.

NOT RECOMMENDED FOR NEW DESIGN

©2024-2026 TagoreTech Inc.

Switch Control table

Table 7: Switch Control Table

V_{DD}[1]	V_1	**Switch state**
1	0	$ANT - RX$ ON[2], TX series switch OFF
1	1	$ANT - TX$ ON, RX series switch OFF and RX shunt switch ON

[1] V_{DD} should be applied first before V_1, otherwise may cause damage to the device.
[2] There is an internal pull-down to ground on the V_1 control pin, the state at start-up without any control voltage applied will be $ANT - RX$ ON.

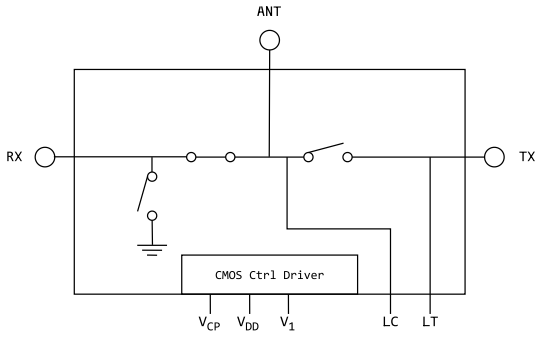

ANT-RX ON ($V_1 = 0$)

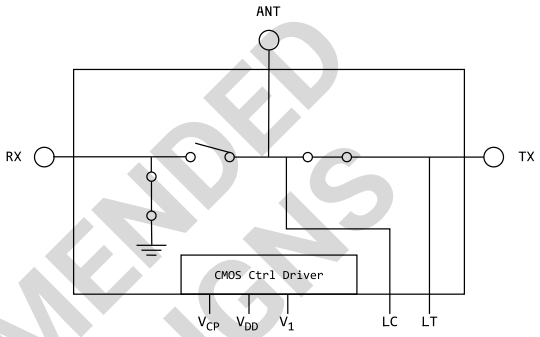

ANT-TX ON ($V_1 = 1$)

NOT RECOMMENDED FOR NEW DESIGNS

©2024-2026 TagoreTech Inc.

Theory of Operation

Asymmetrical switch topology

The TS7029N is an asymmetrical SPDT switch optimized for transmit/receive switching. The TX branch between ANT and TX has a series switch only, which gives low insertion loss (0.40 dB at 800 MHz) and high power handling: 100 W CW and 631 W peak power. The RX branch between ANT and RX has a series switch and a shunt switch. In the ANT-TX ON state, the RX shunt switch connects the RX port to ground, which gives high ANT-RX isolation (50 dB at 800 MHz). In the ANT-RX ON state, the TX series switch is open; the ANT-TX isolation is 22 dB at 800 MHz.

Tuning inductor and tuning capacitors

Pins 17 (LT) and 18 (LC) are connections for an external tuning inductor L_T, which creates a notch in the isolation curve; the inductance is chosen for the frequency band (Table 8). Pins 25 (Gx1) and 30 (Gx2) are connections for tuning capacitors for isolation (C_{11}, C_{12} on the EVB).

Application Information

TS7029N is offering 100 W CW and 631 W peak power capability from 700 MHz to 2.7 GHz, for cellular infrastructure, small cells, macrocells and ADS-B and IFF systems. The datasheet provides matching examples for 0.8 to 1.0 GHz, 0.9 to 1.1 GHz, 1.2 to 1.4 GHz and 2.3 to 2.7 GHz.

The TS7029N is not recommended for new designs. For new designs, please consider the TS8029N (500 MHz to 5.0 GHz, 100 W CW, 631 W peak): TS8029N product page.

NOT RECOMMENDED FOR NEW DESIGNS

©2024-2026 TagoreTech Inc.

Schematics and Evaluation Board

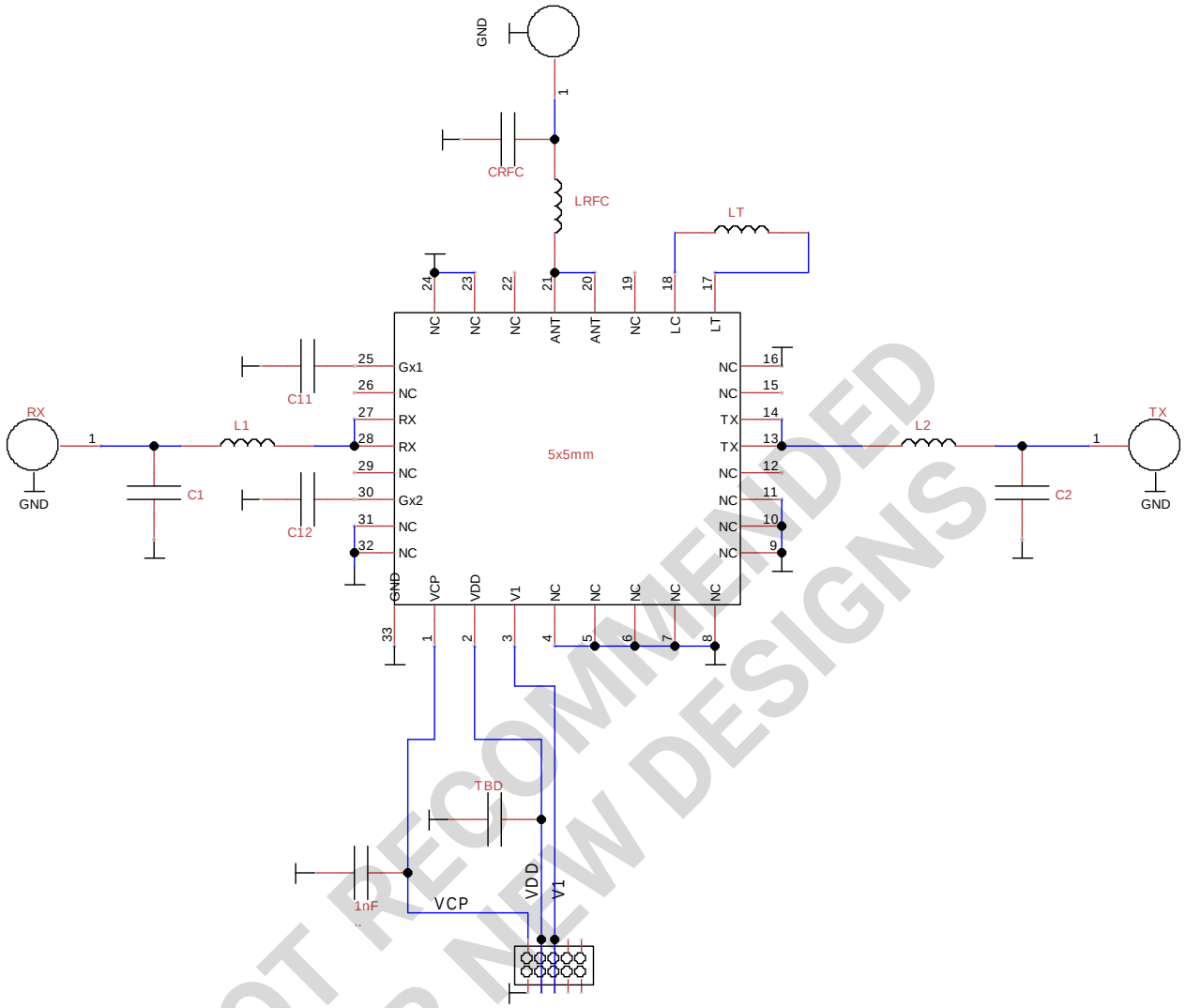

Evaluation board schematic

NOT RECOMMENDED FOR NEW DESIGNS

Notes:

- Pin 33 is the center pad of the device. Multiple plugged through-hole vias should be added on this ground pad and adequate heat sinking should be used.
- The purpose of the connection between V_{CP} and connector N1 is to monitor V_{CP}, do not apply an external voltage to V_{CP}.

Table 8: Matching components for various frequency bands

Band	L_T	L_{RFC}	L_1	L_2	C_{RFC}	C_1	C_2	C_{11}	C_{12}	C_P
0.8 to 1.0 GHz	47 nH	Short	Short	Short	Open	Open	Open	8.2 pF	8.2 pF	1 nF
0.9 to 1.1 GHz	36 nH	Short	Short	Short	Open	Open	Open	8.2 pF	8.2 pF	1 nF
1.2 to 1.4 GHz	27 nH	Short	Short	Short	Open	Open	Open	8.2 pF	8.2 pF	1 nF
2.3 to 2.7 GHz	5.6 nH	1.0 nH	1.0 nH	1.0 nH	0.5 pF	0.4 pF	0.7 pF	1.7 pF	1.7 pF	1 nF

Inductors: ATC 0402WL or Coilcraft 0402HP series. Capacitors: Passive Plus 0603N series.

©2024-2026 TagoreTech Inc.

Typical characteristics

Typical characteristics, tuned 1.2 to 1.4 GHz

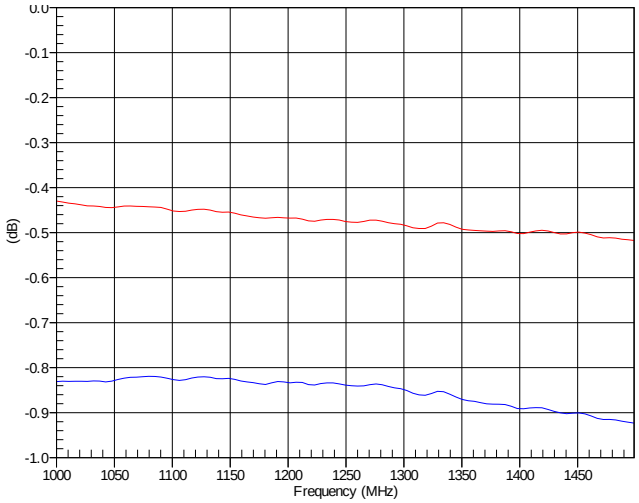

TX (red), RX (blue) insertion loss

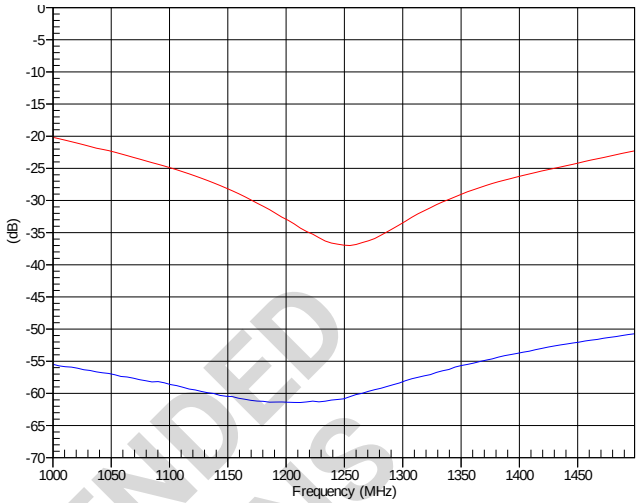

TX (red), RX (blue) isolation

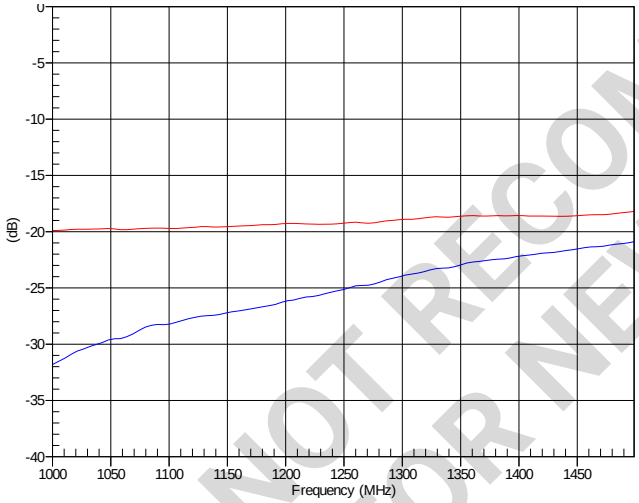

TX (red), RX (blue) return loss

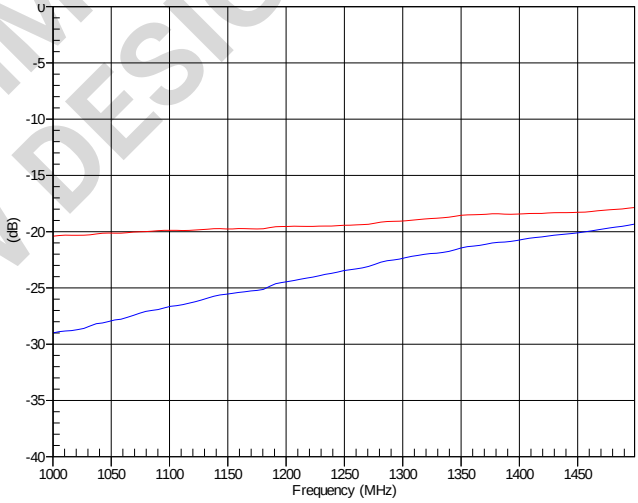

TX (red), RX (blue) ANT return loss

NOT RECOMMENDED FOR NEW DESIGNS

©2024-2026 TagoreTech Inc.

Typical characteristics, tuned 2.3 to 2.7 GHz

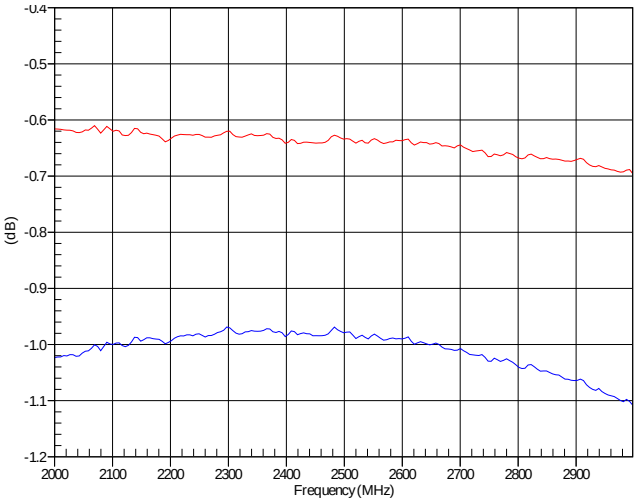

TX (red), RX (blue) insertion loss

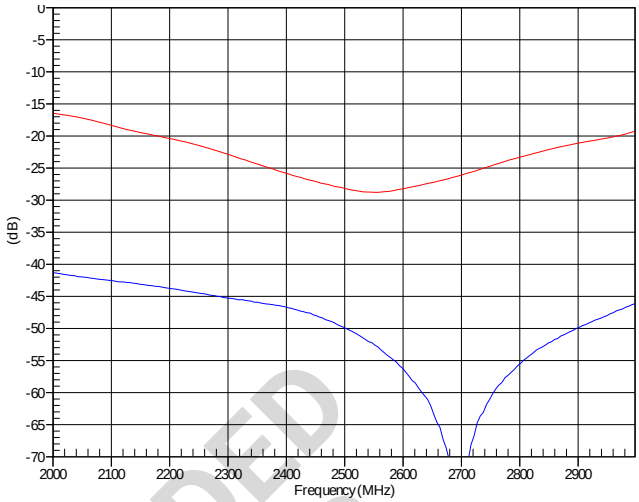

TX (red), RX (blue) isolation

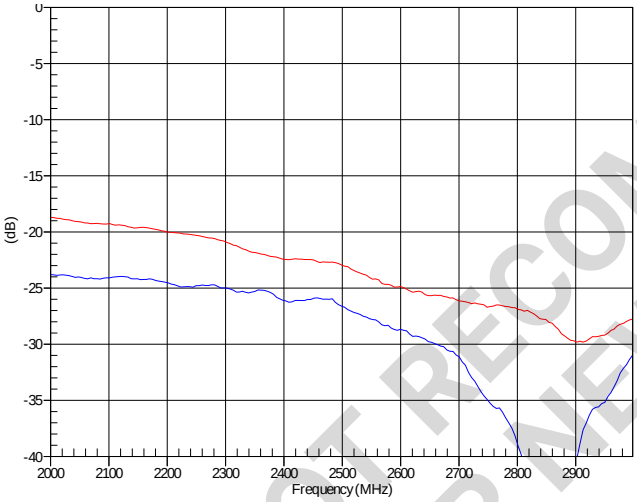

TX (red), RX (blue) return loss

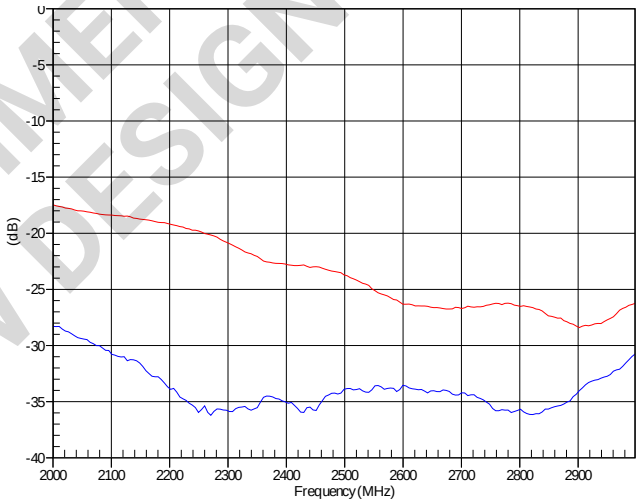

TX (red), RX (blue) ANT return loss

NOT RECOMMENDED FOR NEW DESIGNS

©2024-2026 TagoreTech Inc.

Device Package information

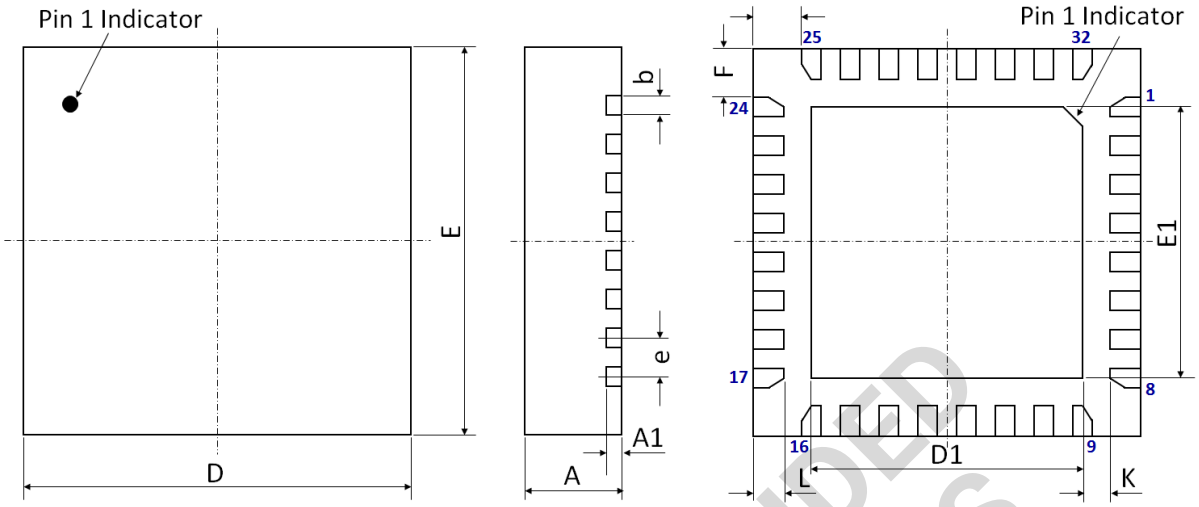

Figure 8: 32-pin QFN 5.0 x 5.0 x 0.85 mm^3 package drawing.

Please refer to application notes TN-001 PCB Design guideline and TN-002 Solder Rework at TagoreTech web page for PCB and soldering guidelines.

Table 9: Device Package Dimensions

Dimension	Value [mm]	Tolerance [mm]	Dimension	Value [mm]	Tolerance [mm]
A	0.85	±0.05	E	5.00 BSC	±0.05
A1	0.203	±0.02	E1	3.10	±0.06
b	0.25	+0.05/-0.07	F	0.625	±0.05
D	5.00 BSC	±0.05	G	0.625	±0.05
D1	3.10	±0.06	L	0.40	±0.05
e	0.50 BSC	±0.05	K	0.50	±0.05

Lead finish: pure Sn without underlayer; thickness 7.5 μm to 20 μm (typical 10 μm to 12 μm).

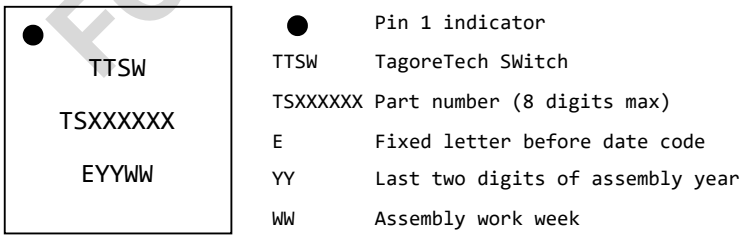

Figure 9: Part marking specification.

NOT RECOMMENDED FOR NEW DESIGNS

©2024-2026 TagoreTech Inc.

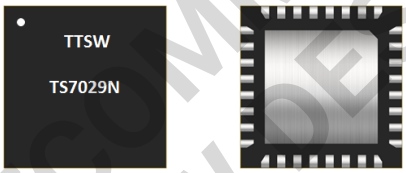

Figure 10: TS7029N, top and bottom side.

NOT RECOMMENDED FOR NEW DESIGNS

©2024-2026 TagoreTech Inc.

PCB Land Design

Notes:

- 4-layer PCB is recommended.
- Via diameter is recommended to be 0.2 mm to prevent solder wicking inside the vias.
- Thermal vias shall only be placed on the center pad.
- The maximum via number for the center pad is 5(X)×5(Y)=25.

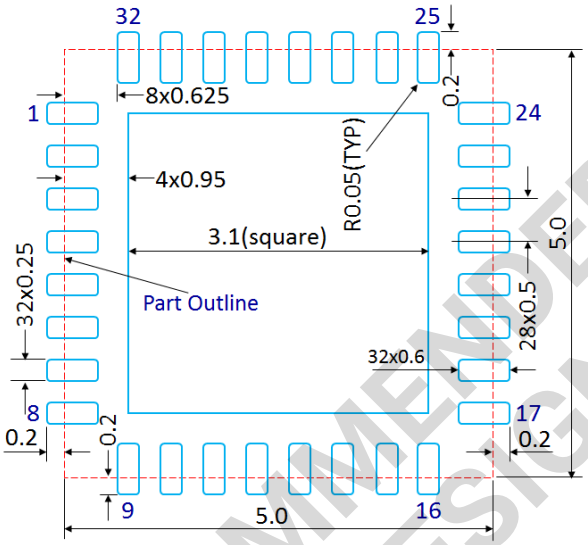

Figure 11: PCB land pattern, dimensions in [mm].



Figure 12: Solder mask pattern, non-solder mask defined (preferred, left) and solder mask defined (right), dimensions in [mm].

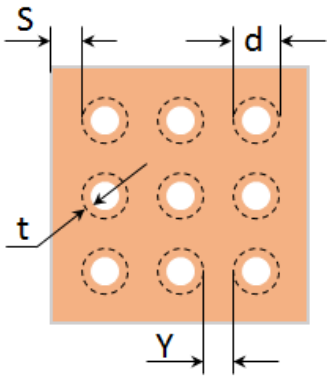

Figure 13: Thermal Via Pattern, Recommended Values: S≥0.15mm; Y≥0.20mm; d=0.2mm; Plating Thickness t=25μm or 50μm.

NOT RECOMMENDED FOR NEW DESIGNS

©2024-2026 TagoreTech Inc.

PCB Stencil Design

Notes:

- Laser-cut, stainless steel stencil is recommended with electro-polished trapezoidal walls to improve the paste release.
- Stencil thickness is recommended to be 125μm.

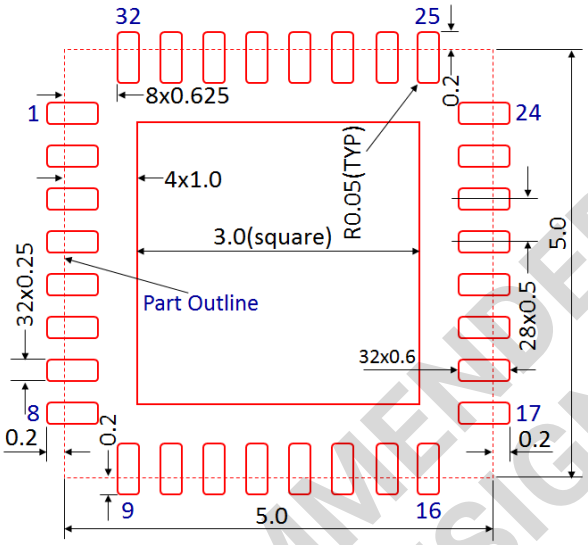

Figure 14: Stencil Openings, dimensions in [mm].

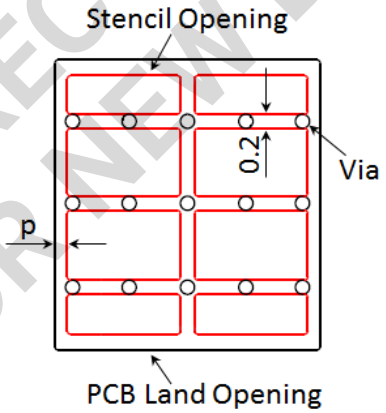

Figure 15: Stencil Openings Shall not Cover Via Areas If Possible, dimensions in [mm].

NOT RECOMMENDED FOR NEW DESIGNS

©2024-2026 TagoreTech Inc.

Tape and Reel Information

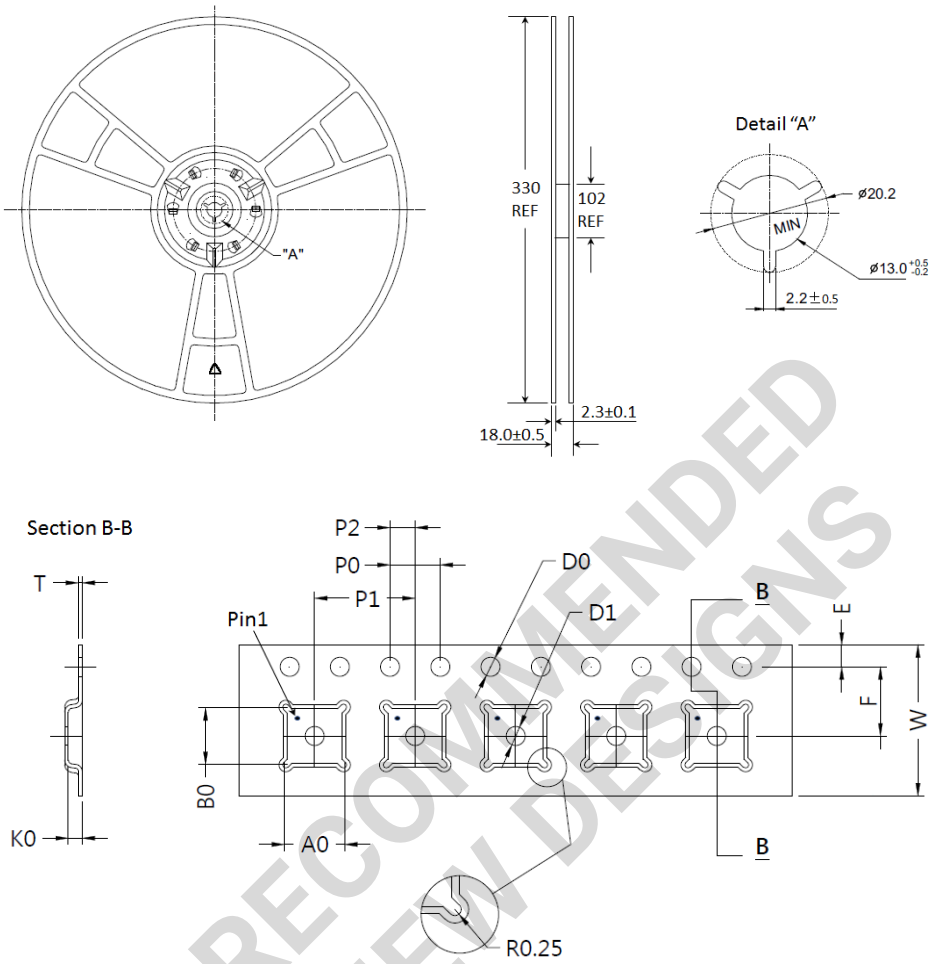

NOT RECOMMENDED FOR NEW DESIGNS

A0[mm]	B0[mm]	D0[mm]	D1[mm]	E[mm]	F[mm]	K0[mm]	P0[mm]	P1[mm]	P2[mm]	T[mm]	W[mm]
5.35	5.35	1.50	1.50	1.75	5.50	1.10	4.00	8.00	2.00	0.30	12.00

©2024-2026 TagoreTech Inc.

Glossary

IL	Insertion loss
ISO	Isolation
RL	Return loss
VSWR	Voltage Standing Wave Ratio
ANT	Antenna port, RF common port
TX	Transmit port
RX	Receive port
L_T	External tuning inductor between pins 17 (LT) and 18 (LC)
Gx1, Gx2	Tuning capacitor pins for isolation (pins 25 and 30)
NRND	Not recommended for new designs
QR	Quick response (code)
ADS-B / IFF	Automatic dependent surveillance-broadcast / Identification friend or foe

Changelog

Table 10: Changelog

Date	Revision	Notes
05/19/2025	2.91	Previous datasheet revision (Word).
10/31/2026	3.00	Transferred to the TagoreTech datasheet format for archiving; the data are unchanged from revision 2.91 (units of the switching time corrected to μs, return loss shown as negative values). Not recommended for new designs; the TS8029N is recommended for new designs. Links to application notes TN-001/TN-002, QR code link to the latest datasheet, glossary.
11/05/2026	3.01	House style update: front page line and QR code link to the replacement part TS8029N datasheet, notice box wording, DigiKey and RFPD links of the TS8029N in the 4-column distributor table, subtitle typography. No data changes.

NOT RECOMMENDED FOR NEW DESIGNS

©2024-2026 TagoreTech Inc.

Legal Information

Published by

TagoreTech Inc.
601 Campus Drive, Suite B3
Arlington Heights, IL 60004, USA

©2024-2026 All Rights Reserved

TagoreTech is a fabless US semiconductor company specializing in GaN RF solutions: high-power RF switches in unique GaN-on-Si technology, RF power amplifiers in GaN-on-SiC, and reconfigurable front-end solutions — such as tunable power amplifiers and antenna tuning — that combine the two. TagoreTech serves defense, radar, datalink, 5G infrastructure, and public safety markets.

Legal Disclaimer

The information provided in this document is believed to be accurate and reliable, but shall in no event be regarded as a guarantee of conditions or characteristics. TagoreTech makes no warranties, express or implied, including without limitation any implied warranty of merchantability or fitness for a particular purpose. TagoreTech assumes no responsibility for the consequences of the use of this information, nor for any infringement of patents or other rights of third parties which may result from its use. No license is granted by implication or otherwise under any patent or patent rights of TagoreTech. Customers are responsible for validating the suitability of TagoreTech products in their own applications and for compliance with all applicable laws and regulations, including export control requirements. Specifications are subject to change without notice. Errors and omissions excepted.

Use in critical applications. TagoreTech products are not designed or authorized for use in life-support devices or systems, safety-critical applications, or applications where failure could reasonably be expected to cause personal injury, unless expressly agreed in writing by an authorized representative of TagoreTech. Any such use is at the customer's own risk.

NOT RECOMMENDED FOR NEW DESIGNS

Sales Contact

For further information on technology, delivery terms, conditions, and prices, please contact TagoreTech: support@tagoretech.com or contact our distributors or representatives as listed at TagoreTech website. Please click the blue links.

Recommended replacement: TS8029N

The TS7029N is not recommended for new designs. Please replace the TS7029N with the TS8029N (500 MHz to 5.0 GHz, 100 W CW, 631 W peak, 5×5 mm QFN-32): TS8029N Product Page, TS8029N Datasheet

DigiKey Digikey TS8029N

RichardsonRFPD An Arrow Company RFPD TS8029N

TS7029N Product Information

Latest version of TS7029N datasheet (archive) is available for download: TS7029N Datasheet

TagoreTech Inc. Product Brochure and datasheets

Tagore Product Brochure and links to all available datasheets is available for download:
TagoreTech Product Brochure

Scan for the latest datasheet