SPDT 10 W CW GaN Broadband RF Switch 10 MHz to 6.0 GHz

Features

- Frequency Range 10 MHz to 6.0 GHz
- Low insertion loss: 0.35 dB @ 800 MHz
- High isolation: 45 dB @ 800 MHz
- High peak power handling capability
- 40 dBm CW hot switching capability
- No external DC blocking capacitors on RF lines
- All RF ports OFF state
- Versatile 2.6 V – 5.5 V power supply
- Charge pump disabled, −18 V supply needed
- Noise level better than −140 dBm kHz^{-1}

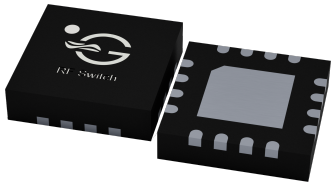

Figure 1: TS72250K in 3.0 x 3.0 mm^2 QFN 16-pin package.

Applications

- Private mobile radio handsets
- Public safety handsets
- Cellular infrastructure
- Small cells
- LTE relays and microcells
- Satellite terminals

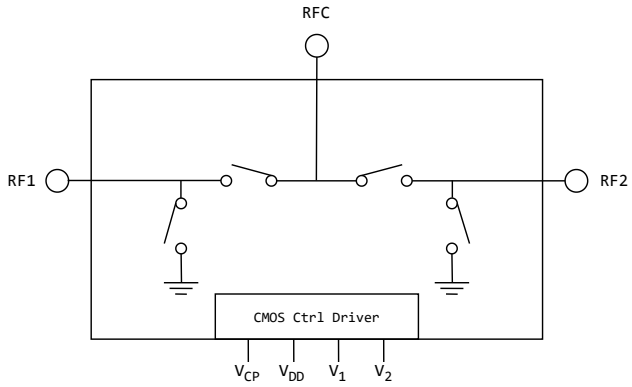

Figure 2: TS72250K functional diagram

General Description

The TS72250K is a symmetrical reflective Single Pole Double Throw (SPDT) switch designed for broadband, high peak power switching applications. Its broadband behavior from 10 MHz to 6.0 GHz makes the TS72250K an excellent switch for all applications requiring low insertion loss, high isolation, and high linearity within a small package size. The TS72250K has the same RF properties as the TS7225FK, except that the internal charge pump has been disabled; an external -18 V supply to the V_{CP} pin is required.

The TS72250K is housed in a compact 3.0×3.0 mm^2 16-lead Quad Flat No-lead (QFN) plastic package.

RoHS

RoHS10/REACH/Halogen free

Contents

Features 1
Applications 1
General Description 1
Ordering information 3
Pin Assignment 4
Absolute Maximum Ratings 5
Electrical Specifications 6
Switching time definition . . . 8
Switch Control table 9
Theory of Operation 10
External V_{CP} voltage of -18 V . . . 10
Schematics and Evaluation Board 10
Typical characteristics 12
Peak power handling with modulated signals . . . 14
Peak-to-average power ratio of QAM signals . . . 14
Crest factor reduction for OFDM . . . 15
Average power capability with modulated signals . . . 15
Device Package information 17
PCB Land Design 19
PCB Stencil Design 21
Tape and Reel Information 22
Glossary 23
Changelog . . . 23
Legal Information 24
Published by . . . 24
Legal Disclaimer . . . 24
Sales Contact . . . 24
Buy TS72250K directly . . . 24
TS72250K Product information . . . 24
TagoreTech Inc. Product Brochure and datasheets . . . 24

©2024-2026 TagoreTech Inc.

Ordering information

Table 1: Ordering Information

Device Part Number	Package Type	Notes
TS72250K	16 Pin 3.0x3.0x0.75 mm^3 QFN	Core part number
TS72250K-EVB	Evaluation Board	
TS72250KMTRPBF[1]	330 mm reel, 3 000 pcs	Full reel

[1] MTRPBF - M: Manufacturing, TR: Tape and Reel, and PBF: lead free.

Table 2: Tape and Reel Information

Form	Quantity	Reel Diameter	Reel Width
Tape and Reel	3 000	13” (330mm)	18mm

©2024-2026 TagoreTech Inc.

Pin Assignment

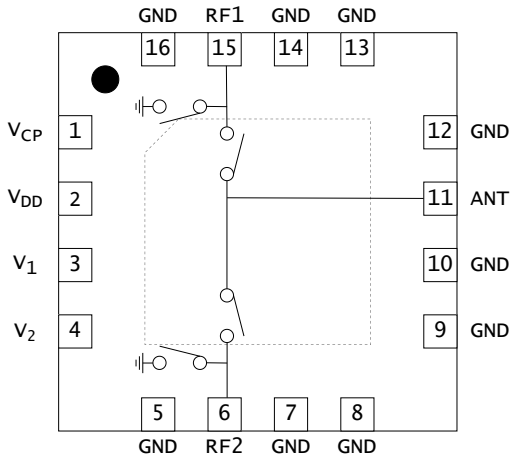

Figure 3: TS72250K pin assignment [top view]

Table 3: Pin Definition

Pin Number	Pin Name	Description
1	V_{CP}	Internal charge pump voltage disabled, -18 V supply needed on this pin.
2	V_{DD}	DC Power Supply
3	V_1	Switch control input 1
4	V_2	Switch control input 2
6	RF2	RF port 2
5,7,8,9,10,12,13,14,16	GND	Connect to ground[2]
11	RFC	RF Common port (Antenna port)
15	RF1	RF port 1
17 [1]	GND	Ground thermal pad, please connect to GND

[1] The backside ground (thermal) pad of the package must be grounded directly to the ground plane of PCB with multiple vias, and adequate heat sinking must be used to ensure proper operation and thermal management.
[2] These pins are NC pins inside the package. To avoid floating pins around RF lines, we request these to be connected to ground.

©2024-2026 TagoreTech Inc.

Absolute Maximum Ratings

Table 4: Absolute Maximum Ratings $T_A = +25$°C unless otherwise specified[1].

Parameter	Symbol	Value	Unit
Electrical Ratings			
Power Supply Voltage	V_{DD}	5.5	V
Negative supply voltage, external, on V_{CP} pin[3]	V_{CP}	-20	V
Storage Temperature Range	T_{st}	−55 – 125	°C
Operating Temperature Range	T_{op}	−40 – 85	°C
Maximum Junction Temperature	T_j	+140	°C
Maximum RF CW input power, 800 MHz	RFx	42	dBm
Maximum RF peak input power, 800 MHz, 1% duty cycle, 10 μs pulse	RFx	46	dBm
Max RF peak voltage 30MHz	RFx / RFC	60	V
Max RF peak voltage f_{max}	RFx / RFC	60	V
Thermal Ratings			
Thermal Resistance (junction-to-case) – Bottom side	$R_{\theta jc}$	25	°C/W
Thermal Resistance (junction-to-top)	$R_{\theta jt}$	$\leq$39	°C/W
Soldering Temperature	T_{solder}	+260	°C
ESD Ratings			
Human Body Model (HBM)	Level 1B	500 – $<$1000	V
Charged Device Model (CDM)	Level C3	$\geq$1000	V
Moisture Rating			
Moisture Sensitivity Level[2]	MSL	1	

[1] Maximum ratings are absolute ratings. Exposure to absolute maximum rating conditions for extended periods may affect device reliability and can cause permanent damage to the device. Exceeding one or a combination of the absolute maximum ratings may cause permanent and irreversible damage to the device and/or to surrounding circuit. Functional operation of the device is not implied in any conditions above those indicated in the Electrical Specifications section.

[2] Tagore recommends to store parts in moisture barrier bag to preserve solderability.

[3] Internal charge pump disabled, the external -18 V supply is required. V_{DD} must be applied first, minimum 50 μs before V_{CP}; shutdown in the opposite order.

©2024-2026 TagoreTech Inc.

Electrical Specifications

Table 5: Electrical Specifications $T_A = +25°C; V_{DD} = +3.3V; 50\Omega$ Source/Load.

Parameter	Condition	Minimum	Typical	Maximum	Unit
Operating frequency[1]	f	10		6000	MHz
Insertion loss	400 MHz		0.30		dB
RFC – RFx	800 MHz		0.35	0.45	dB
	1.95 GHz		0.40	0.60	dB
	2.6 GHz		0.45	0.70	dB
	6.0 GHz		0.90		dB
Isolation	400 MHz		50		dB
RFC – RFx	800 MHz	40	45		dB
	1.95 GHz	30	35		dB
	2.6 GHz	27	32		dB
	6.0 GHz		17		dB
Return Loss	400 MHz		-25		dB
RFC – RFx	800 MHz		-25		dB
	1.95 GHz		-25		dB
	2.6 GHz		-25		dB
	6.0 GHz		-13		dB

[1] No external DC blocking capacitors are required on RF pins unless DC voltage is applied on a RF pin.

©2024-2026 TagoreTech Inc.

Table 6: Electrical Specifications $T_A = +25°C; V_{DD} = +3.3V; 50\Omega$ Source/Load.

Parameter	Condition	Minimum	Typical	Maximum	Unit
Operating frequency	f	10		6000	MHz
Harmonic Distortion					
H_2	800MHz, P_{in} =35dBm		-81		dBc
H_3	800MHz, P_{in} =35dBm		-81		dBc
IIP3	800MHz		73		dBm
Power and Compression point					
P_{maxCW}	Max RF CW Power		40		dBm
$P_{maxpeak}$[2]	Max RF Peak Power, 800 MHz, pulsed		45		dBm
$P_{0.1dB}$[3]	800MHz, CW	40	42		dBm
P_{maxhot}[4]	Max RF CW Power, hot switching		40		dBm
Noise					
Noise level[8]	RBW=1kHz		-140		dBm
Switching Time					
t_{SW}, $V_{CP} = -18$ V	50% CTRL to 10/90% RF value,		0.7		μs
Power Supply, DC					
Power supply[6]	V_{CP}	-19	-18	-17	V
Power supply[7]	I_{CP}			100	μA
Control voltage	Power Supply V_{DD}	2.6	3.3	5.5	V
	All control pins high[5], V_{ih}	1.0	3.3	5.25	V
	All control pins low, V_{il}	-0.3		0.5	V
Control current	All control pins high, I_{ih}			7.5	μA
	All control pins low, I_{il}		0		μA
Current consumption	I_{DD}, active mode (V_{DD} on)		160	200	μA

[2] 1% duty cycle and 10 μs frame width. Peak $P_{0.1dB}$.
[3] $P_{0.1dB}$ is a figure of merit. Please do not exceed Absolute Maximum ratings.
[4] The device supports RF signal hot switching with +40 dBm CW input power.
[5] Control voltage V_{ih} cannot be higher than V_{DD} (to avoid forward biasing of ESD diode)
[6] TS72250K internal charge pump is disabled and an external -18 V supply to V_{CP} is required for operation. V_{DD} should be applied first before V_{CP}, with a delay of 50 μs; shutdown in opposite order.
[7] Static consumption. Depends on the pulse repetition rate, up to 10 mA with 20 kHz pulse repetition rate.
[8] Internal charge pump is disabled; there is no charge pump switching noise. Noise level is valid over the whole operating frequency range.

©2024-2026 TagoreTech Inc.

Switching time definition

Example of the definition by using 10 W/40 dBm signal. We apply 10W signal to RF port, stabilized with isolator. Isolator is needed as our switch shows to RF port approximately 4Ω impedance. Let's assume that the switch insertion loss is 0.3 dB. Therefore 90% of the RF signal is 39.55 dBm and 10% of the RF signal is 1W/30dBm. We need to take into account 0.3dB insertion loss, therefore numbers are 39.25 dBm and 29.7 dBm respectively. We change the control from low to high and our time reference point is when our control signal exceeds lower threshold value V_{ihlow}. In certain measurements when control signal rise time is significantly shorter than RF output signal, we approximate start of the clock with 50% point of the control signal.

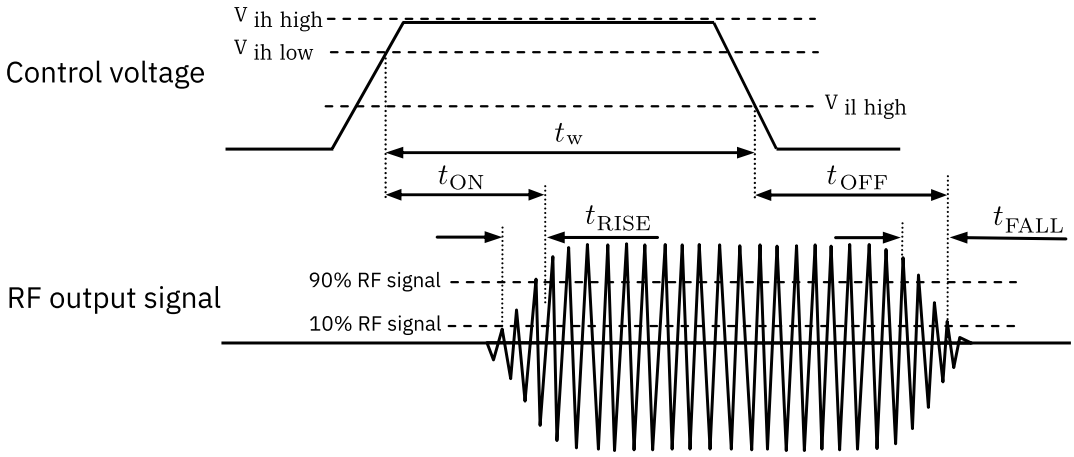

Figure 4: Switching time definition, t_{ON}, t_{OFF}, t_{RISE}, t_{FALL}. Minimum pulse width t_w.

In the TS72250K, the internal charge pump is disabled and an external -18 V supply to V_{CP} is required. Maximum pulse repetition rate f_{PRR} defines the maximum frequency for switching events. With the external -18 V supply, the switch can be driven at least to 20 kHz f_{PRR}. Expect current consumption of 10 mA from the -18 V supply.

©2024-2026 TagoreTech Inc.

Switch Control table

Table 7: Switch Control Table

V_{DD}[1,4]	V_2	V_1	**Switch state**
1	0	0	$RFC - RF1$ ON[2]
1	0	1	$RFC - RF2$ ON
1	1	0	All OFF[3]

[1] V_{DD} should be applied first before V_1 and V_2, otherwise may cause damage to the device.
[2] There are internal pull-downs to ground on both V_1 and V_2 control pins, the state at start-up without any control voltage applied will be $RFC - RF1$ ON.
[3] If All OFF state is not used, the switch can be operated with single control pin V_1
[4] V_{DD} should be applied first before V_{CP}, with a delay of 50 μs. Shutdown should be in opposite order.

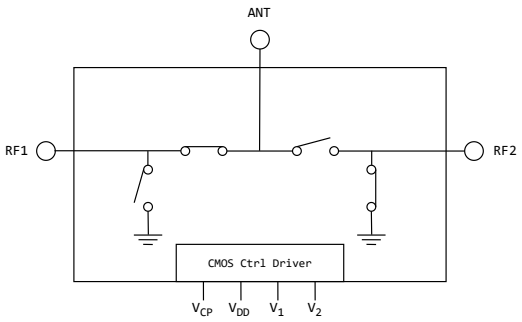

RFC-RF1 ON

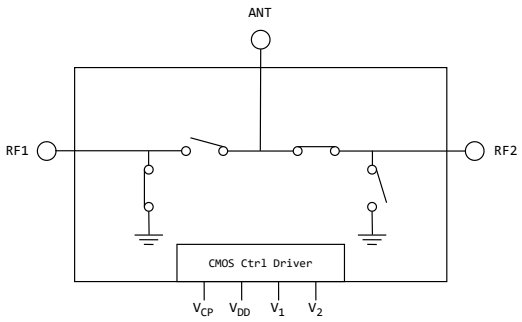

RFC-RF2 ON

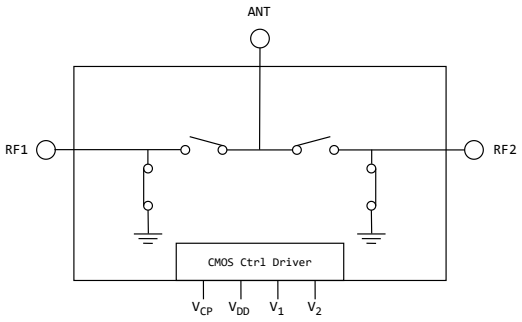

ISO (Isolation state)

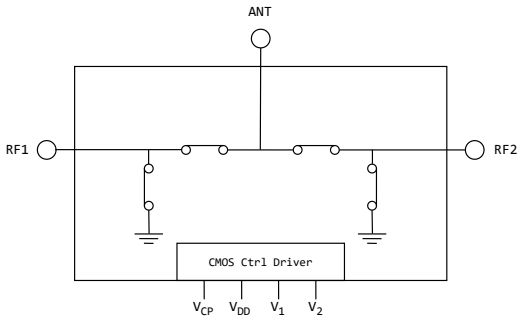

V_{DD} off state

©2024-2026 TagoreTech Inc.

Theory of Operation

External V_{CP} voltage of -18 V

TS72250K requires an external voltage supply to V_{CP}, as the internal charge pump is disabled. The external supply supports pulse repetition rate f_{PRR} of more than 20 kHz, in some cases even up to 100 kHz. It is mandatory to supply first V_{DD}, have a delay of 50 μs and then apply -18 V to V_{CP}. Shutdown should be in opposite order.

Schematics and Evaluation Board

Only two external components are recommended, 1 nF for V_{CP} and 10 nF for V_{DD} lines. Pin 17 in the schematic refers to the center (thermal) pad of the device.

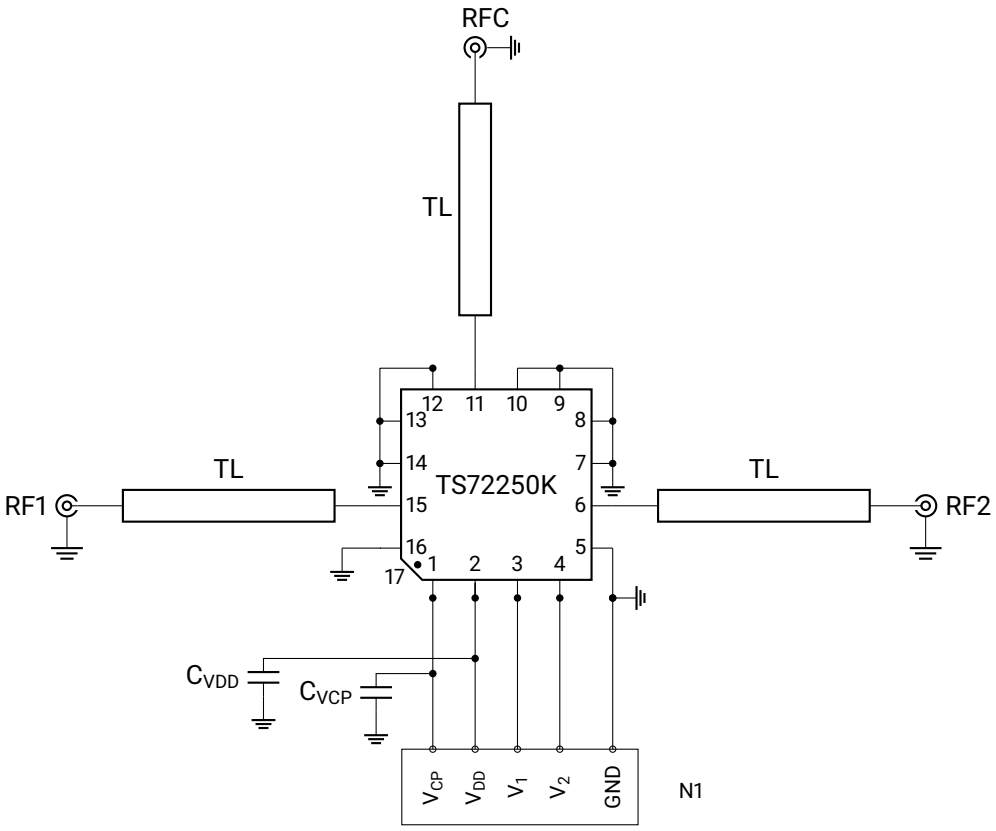

Schematics of TS72250K EVB

Table 8: Components used for TS72250K EVB

Reference	Part number / Value	Description	Notes
C_{VDD}	10 nF	Capacitor	GRM155R71H103KA88
C_{VCP}	1 nF	Capacitor	GRM155R71H102KA01D

©2024-2026 TagoreTech Inc.

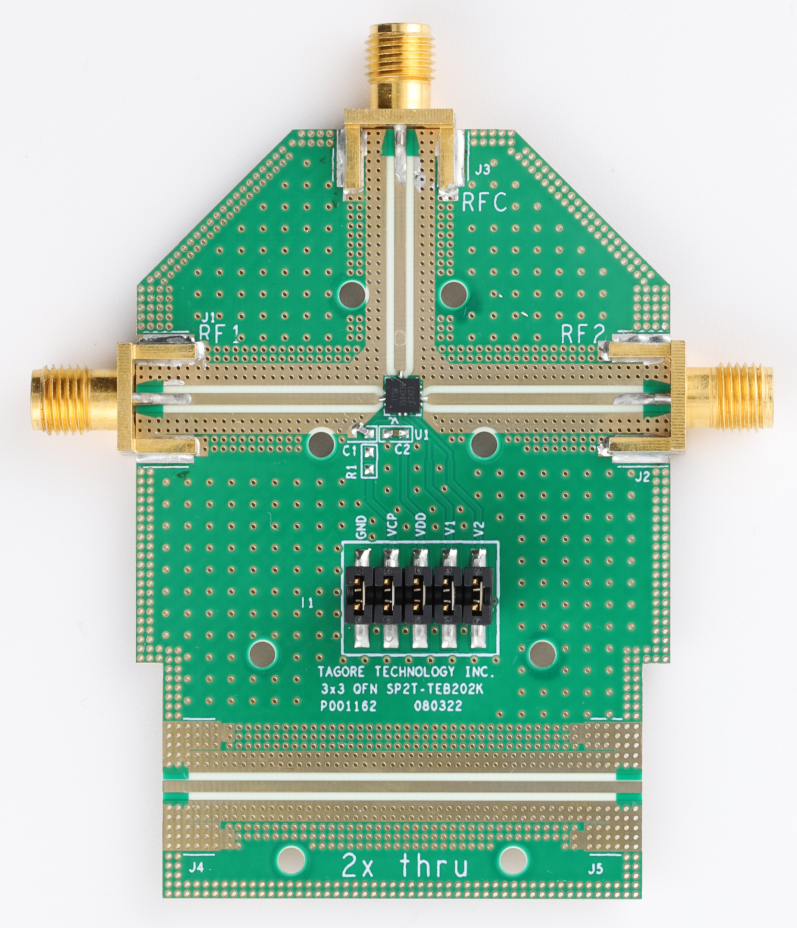

Photo of TS72250K EVB

©2024-2026 TagoreTech Inc.

Typical characteristics

These measurements have been taken from TS7225FK EVB; the TS72250K RF performance is identical.

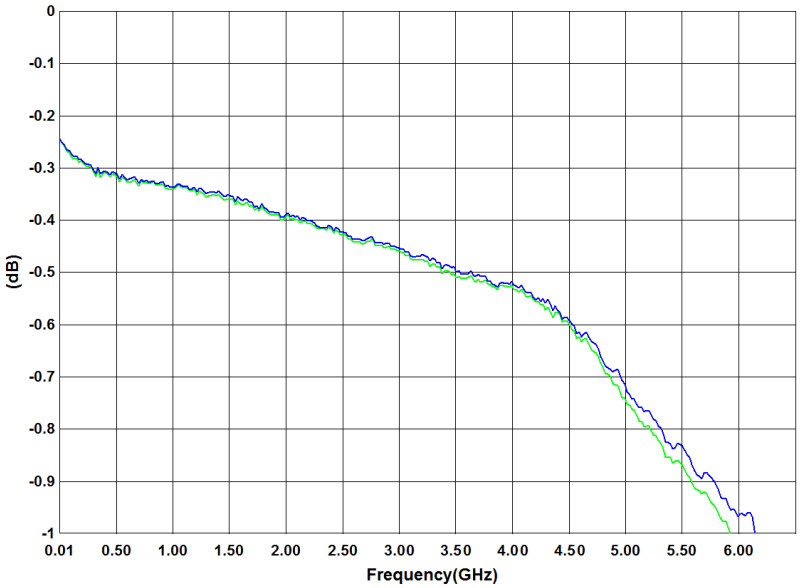

Insertion loss, RFC – RFx.

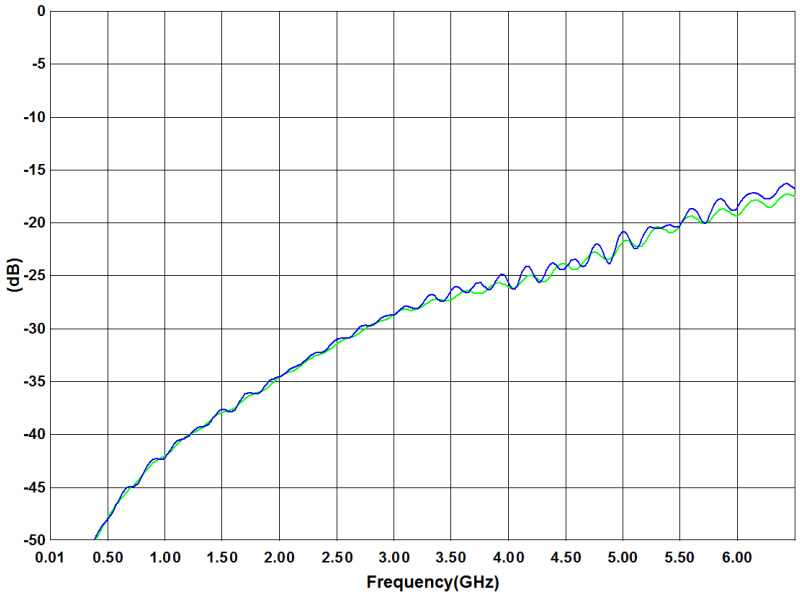

Isolation, RFC – RFx.

©2024-2026 TagoreTech Inc.

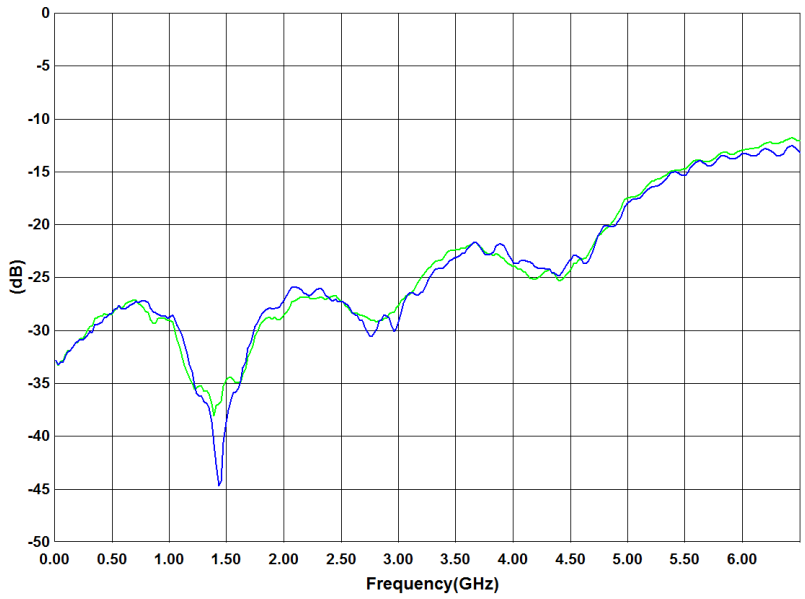

RF1, RF2 Return loss.

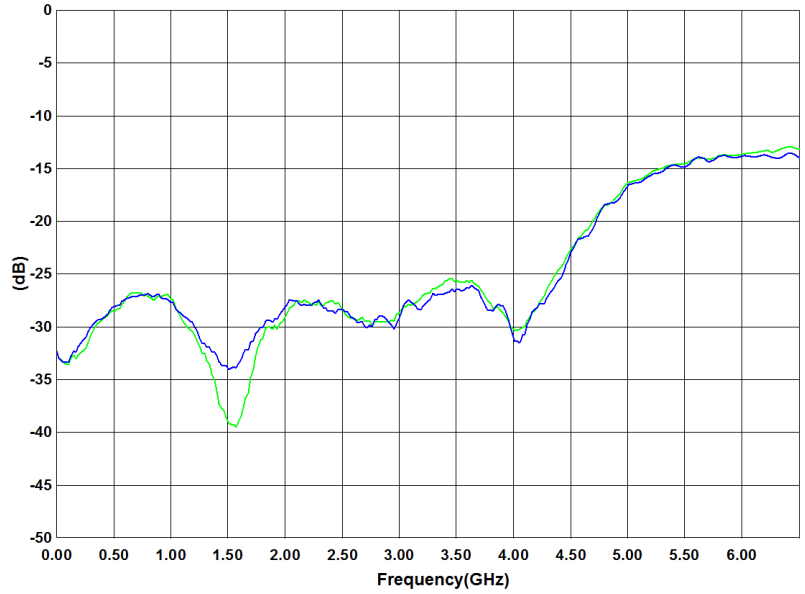

RFC (Antenna port) Return loss.

©2024-2026 TagoreTech Inc.

Peak power handling with modulated signals

The TS72250K is rated for 40 dBm (10 W) average power (CW, 100% duty cycle) and 45 dBm (31.6 W) peak power, where the peak power rating is characterized with 10 μs pulses at 1% duty cycle. The two ratings describe two different physical limits of the switch. The average power rating is a thermal limit: the power dissipated in the switch, and therefore the junction temperature, is set by the average RF power. The peak power rating is a voltage limit: the instantaneous RF voltage across the OFF-state transistors must remain below their breakdown voltage. At 45 dBm in a 50 Ω system, the RF peak voltage is 56 V.

Gallium Nitride is particularly well suited for this task. The high breakdown field of GaN allows a switch to sustain high RF peak voltages, so that the peak power capability of the TS72250K exceeds its average power rating by a factor of 3.2 (5 dB). A switch whose peak capability is equal to its average rating must be derated by the full peak-to-average ratio of the signal, whereas the TS72250K can handle the envelope peaks of single-carrier modulated signals with little or no back-off.

Peak-to-average power ratio of QAM signals

Quadrature amplitude modulation (QAM), such as 16-QAM, 64-QAM or 256-QAM, does not have a constant envelope. The instantaneous envelope power fluctuates around the average power, and its peaks can be several dB above the average. The peaks are statistical in nature: the higher the level, the smaller the fraction of time for which the envelope exceeds it. This behavior is described by the complementary cumulative distribution function (CCDF) of the signal. The peak-to-average power ratio (PAPR) at a probability p is the level, relative to the average power, which the envelope exceeds for a fraction p of the time.

For single-carrier QAM, the PAPR is set by the constellation and by the pulse-shaping filter: a smaller root-raised-cosine (RRC) roll-off factor α gives a narrower spectrum but higher envelope peaks. For OFDM, the sum of many independently modulated subcarriers produces a nearly Gaussian signal, and the PAPR is practically independent of the QAM order of the subcarriers. OFDM therefore has a clearly higher PAPR than single-carrier QAM.

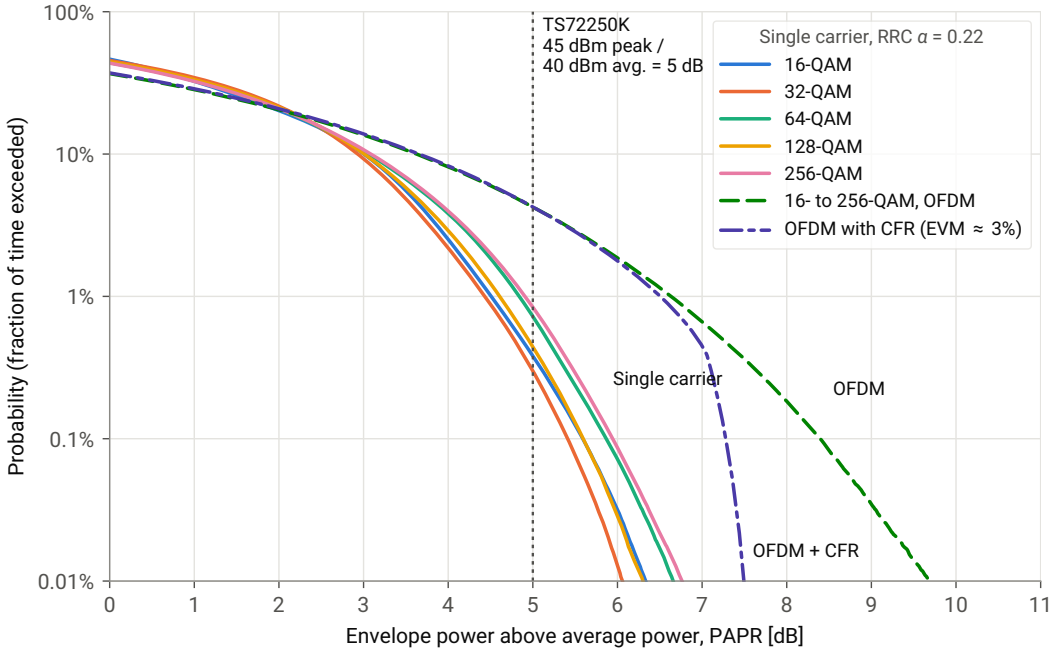

Figure 6: CCDF of the envelope power of QAM signals: fraction of time the envelope power exceeds the average power by the given PAPR. OFDM with CFR: iterative clipping and filtering, EVM ≈ 3%. The dotted line marks the 45 dBm / 40 dBm (5 dB) peak-to-average capability of the TS72250K.

©2024-2026 TagoreTech Inc.

Crest factor reduction for OFDM

Because the highest envelope peaks of an OFDM signal are rare, practical OFDM transmitters apply crest factor reduction (CFR) in the digital baseband before the power amplifier. A common method is iterative clipping and filtering: the envelope is limited to a threshold above its average, and the spectral regrowth caused by the clipping is filtered away, so that the transmitted spectrum and adjacent-channel leakage are preserved. The price is in-band distortion, expressed as an increase in error vector magnitude (EVM). The amount of CFR that can be applied is therefore set by the EVM budget of the modulation: 16-QAM tolerates considerably more distortion than 256-QAM. CFR removes only the rare, highest peaks; the PAPR at 1% to 10% probability is practically unchanged, while the PAPR at 0.1% is reduced by 0.4 dB to 1.9 dB for EVM contributions of 1.5% to 5%. Table 9 includes typical values for OFDM with CFR.

Average power capability with modulated signals

Typical PAPR values are listed in Table 9. Figure 6 shows the complete CCDF curves together with the 5 dB peak-to-average capability of the TS72250K. At the full 40 dBm average rating, the envelope of a single-carrier 16- to 256-QAM signal exceeds the 45 dBm peak level only 0.3% to 0.8% of the time, which is within the 1% duty cycle of the peak power rating. An OFDM signal exceeds the same level about 4% of the time, with or without CFR; if its envelope peaks are required to stay within 45 dBm at the 1% probability level, the average power is limited to about 38.4 dBm (6.9 W). At the 0.1% probability level the values given in the last column of the table apply. The envelope peaks of modulated signals last only a fraction of a symbol period, which is much shorter than the 10 μs pulses used for the peak power characterization.

©2024-2026 TagoreTech Inc.

Table 9: Peak-to-average power ratio (PAPR) of QAM signals, exceeded for the given fraction of time.

Modulation	PAPR [dB] at probability[2]			TS72250K max. avg. power [W][1]
	10%	1%	0.1%	
Single carrier, RRC pulse shaping, $\alpha = 0.22$				
16-QAM	3.0	4.5	5.6	8.8
32-QAM	2.9	4.4	5.4	9.2
64-QAM	3.1	4.8	5.8	8.4
128-QAM	3.0	4.6	5.6	8.8
256-QAM	3.1	4.9	5.9	8.2
Single carrier, RRC pulse shaping, $\alpha = 0.35$				
16-QAM	3.0	4.4	5.1	9.8
32-QAM	3.0	4.2	4.8	10.0
64-QAM	3.0	4.8	5.6	8.8
128-QAM	3.0	4.5	5.2	9.6
256-QAM	3.1	4.8	5.7	8.6
OFDM, 1024 subcarriers, no crest factor reduction				
16-QAM	3.6	6.6	8.4	4.6
32-QAM	3.6	6.6	8.4	4.6
64-QAM	3.6	6.6	8.4	4.6
128-QAM	3.6	6.6	8.4	4.6
256-QAM	3.6	6.6	8.4	4.6
OFDM, 1024 subcarriers, with crest factor reduction (clipping and filtering)[3]				
CFR for EVM ≈ 1.5%, e.g. 256-QAM	3.6	6.6	8.0	5.1
CFR for EVM ≈ 3%, e.g. 64/128-QAM	3.7	6.5	7.3	5.9
CFR for EVM ≈ 5%, e.g. 16/32-QAM	3.7	6.2	6.5	7.1

[1] Average power at which the envelope peaks at the 0.1% probability level remain within the 45 dBm (31.6 W) peak power rating, $P_{\text{avg}} = 31.6\,\text{W}/10^{\text{PAPR}_{0.1\%}/10}$, limited to the 40 dBm (10 W) average power rating. Indicative values; in a mismatched load (VSWR > 1) the RF peak voltage increases and further back-off may be required.

[2] PAPR values are calculated from the envelope power of ideal, unclipped signals. Measured values depend on the transmitter, its filtering, and any crest factor reduction applied.

[3] Iterative clipping and filtering, 4 iterations, clipping level 8.0 dB, 7.0 dB and 6.0 dB above the average power; EVM is the in-band distortion added by the CFR only. The PAPR after CFR is practically independent of the QAM order; the QAM orders given are examples of modulations whose EVM budget typically allows the stated CFR. Actual CFR performance depends on the implementation.

The QAM and OFDM information in this section is provided for information only. It is based on calculated signal statistics, has not been fully characterized on the TS72250K, and is not binding on TagoreTech; the ratings given in the Absolute Maximum Ratings and Electrical Specifications sections apply.

©2024-2026 TagoreTech Inc.

Device Package information

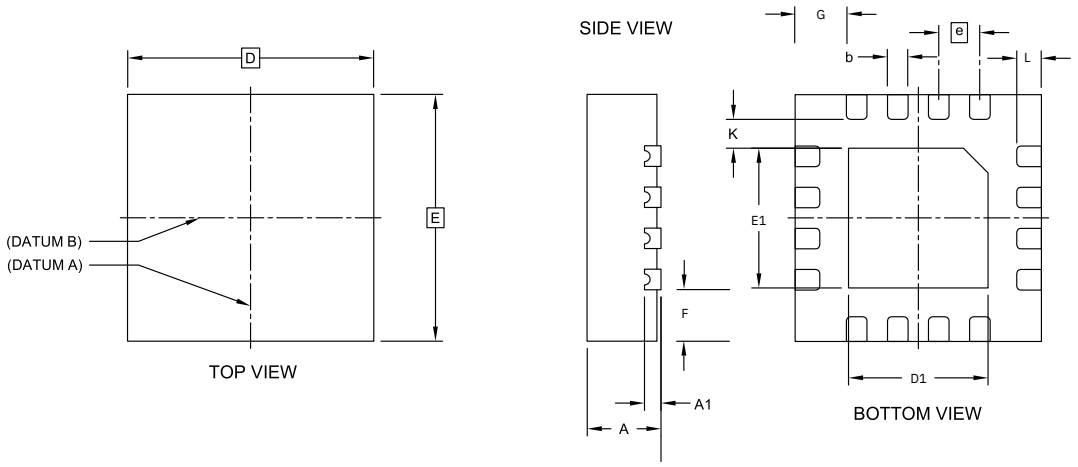

Figure 7: 16-pin QFN 3.0 x 3.0 x 0.75 mm^3 package drawing.

Please refer to application notes TN-001 PCB Design guideline and TN-002 Solder Rework at TagoreTech web page for PCB and soldering guidelines.

Table 10: Device Package Dimensions

Dimension	Value [mm]	Tolerance [mm]	Dimension	Value [mm]	Tolerance [mm]
A	0.75	±0.05	E	3.00 BSC	±0.05
A1	0.203	±0.02	E1	1.70	±0.05
b	0.25	+0.05/-0.07	F	0.625	±0.05
D	3.00 BSC	±0.05	G	0.625	±0.05
D1	1.70	±0.05	L	0.25	±0.05
e	0.50 BSC	±0.05	K	0.40	±0.05

Lead finish: Pure Sn without underlayer; thickness 7.5 μm – 20 μm (typical 10 – 12 μm).

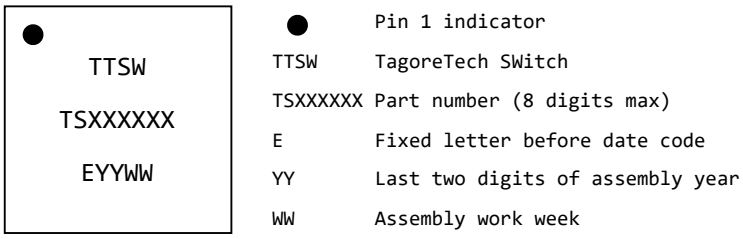

Figure 8: Part marking specification.

©2024-2026 TagoreTech Inc.

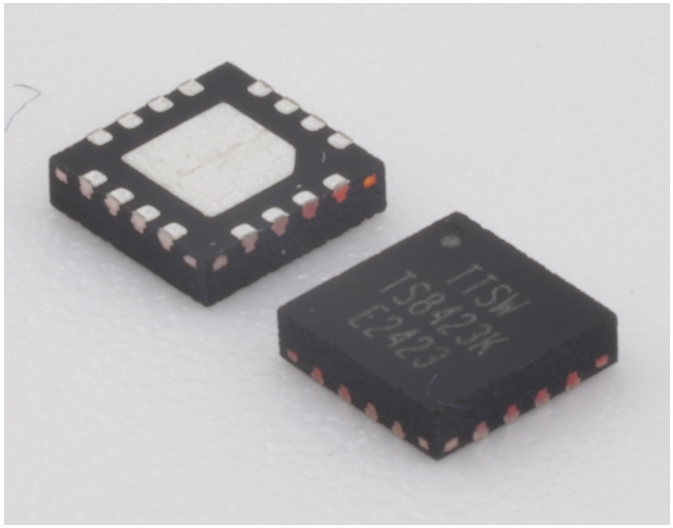

Figure 9: TS72250K photo, top and bottom side.

©2024-2026 TagoreTech Inc.

PCB Land Design

Notes:

- 4-layer PCB is recommended.
- Via diameter is recommended to be 0.2mm to prevent solder wicking inside the vias.
- Thermal vias shall only be placed on the center pad.
- The maximum via number for the center pad is 3(X)×3(Y)=9.

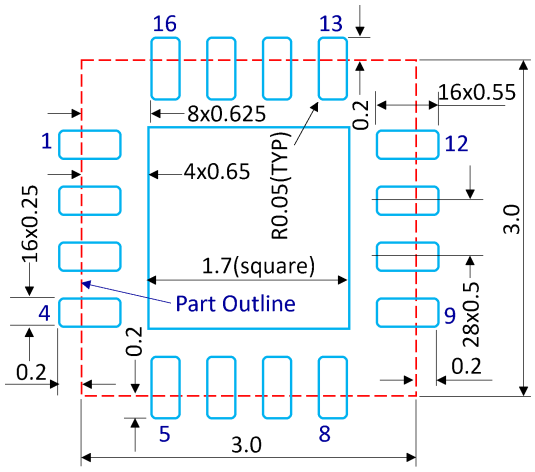

Figure 10: PCB land pattern, dimensions in [mm].

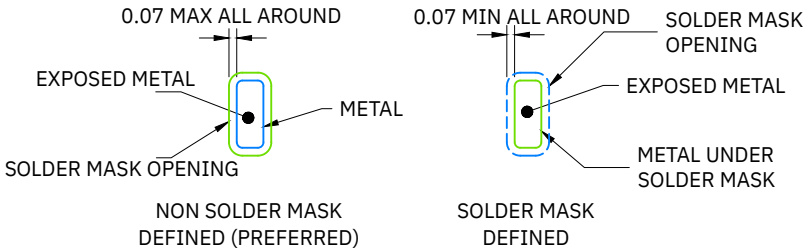

Figure 11: Solder mask opening, dimensions in [mm].

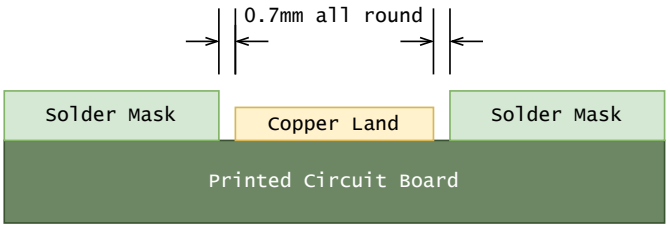

Figure 12: Preferred solder mask opening, side view, dimensions in [mm].

©2024-2026 TagoreTech Inc.

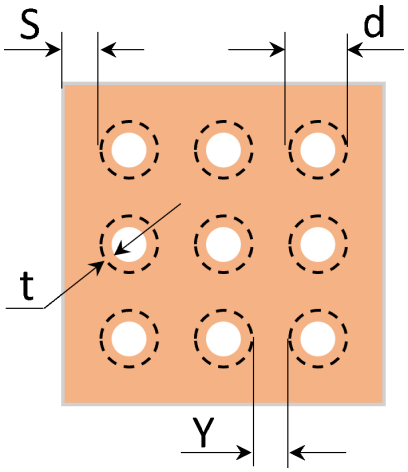

Figure 13: Thermal Via Pattern, Recommended Values: S≥0.15mm; Y≥0.20mm; d=0.2mm; Plating Thickness t=25μm or 50μm.

©2024-2026 TagoreTech Inc.

PCB Stencil Design

Notes:

- Laser-cut, stainless steel stencil is recommended with electro-polished trapezoidal walls to improve the paste release.
- Stencil thickness is recommended to be 125μm.

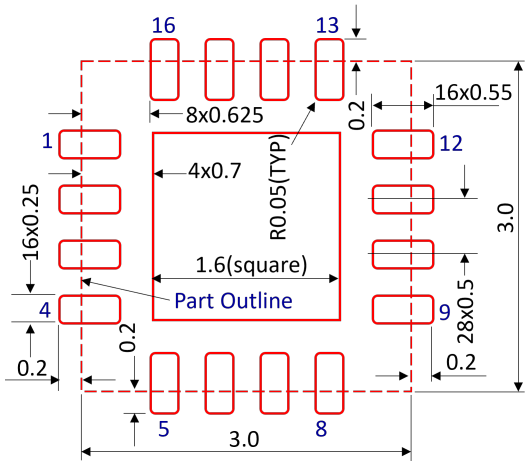

Figure 14: Stencil Openings, dimensions in [mm].

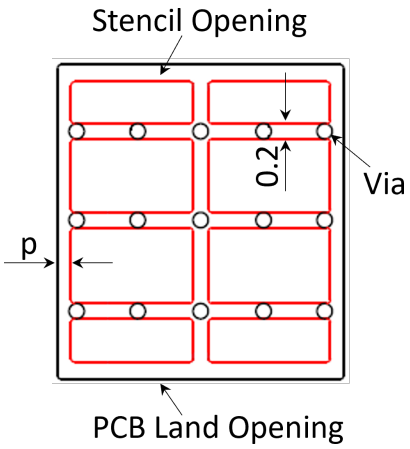

Figure 15: Stencil Openings Shall not Cover Via Areas If Possible, dimensions in [mm].

©2024-2026 TagoreTech Inc.

Tape and Reel Information

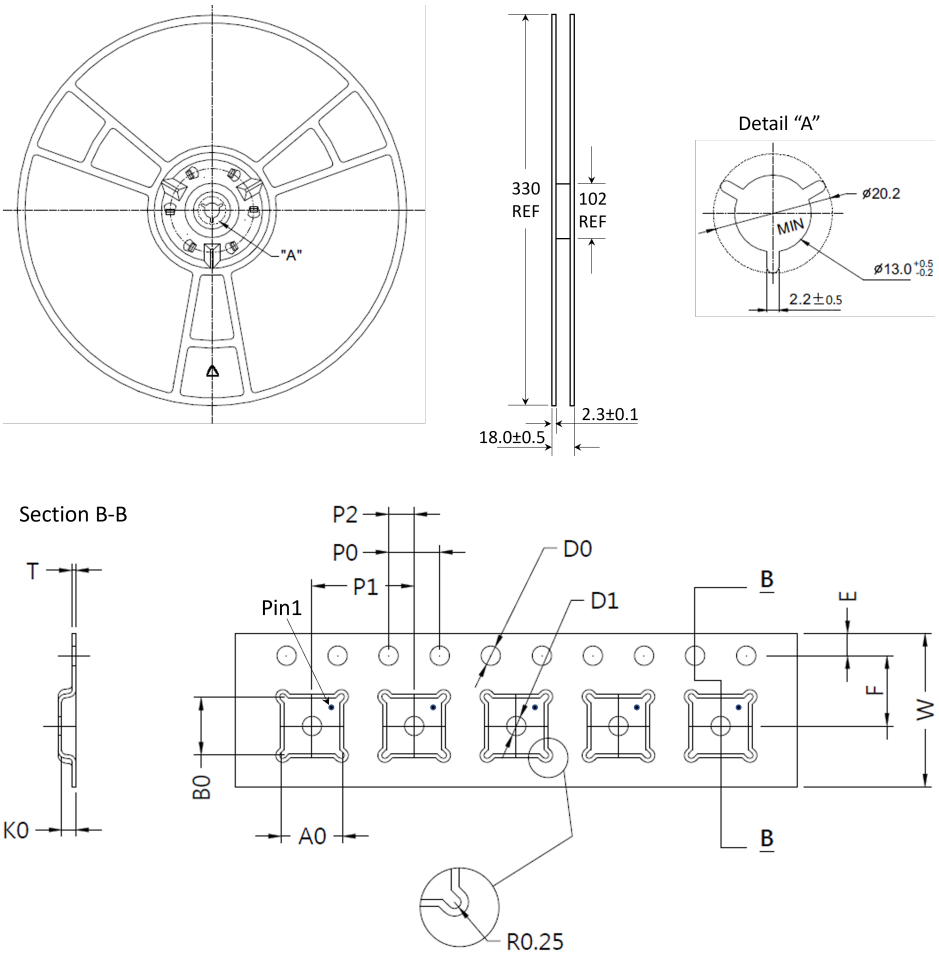

A0[mm]	B0[mm]	D0[mm]	D1[mm]	E[mm]	F[mm]	K0[mm]	P0[mm]	P1[mm]	P2[mm]	T[mm]	W[mm]
3.35	3.35	1.50	1.50	1.75	5.50	1.10	4.00	8.00	2.00	0.30	12.00

©2024-2026 TagoreTech Inc.

Glossary

IL	Insertion loss
ISO	Isolation
RL	Return loss
VSWR	Voltage Standing Wave Ratio
RFC	Antenna port or common port, referred as RFC
RFx	RF Port number x
CCDF	Complementary cumulative distribution function
CFR	Crest factor reduction
EVM	Error vector magnitude
OFDM	Orthogonal frequency-division multiplexing
PAPR	Peak-to-average power ratio
QAM	Quadrature amplitude modulation
RRC	Root-raised-cosine (pulse-shaping filter)
CP	Charge pump

Changelog

Table 11: Changelog

Date	Revision	Notes
09/21/2026	3.00	Initial release of TS72250K, derived from TS7225FK datasheet (identical RF performance); internal charge pump disabled, external -18 V supply required.
10/26/2026	3.01	Peak power handling with modulated signals added: PAPR of QAM and OFDM signals, crest factor reduction, CCDF plot. P_{maxCW} 40 dBm added to the electrical specification, RF peak input power 46 dBm and RF peak voltage 60 V added to the absolute maximum ratings. QR code link to the latest datasheet, links to application notes TN-001/TN-002, distributor table reformatted, glossary extended. $\mathrm{V_{DD}}$ to $\mathrm{V_{CP}}$ delay 50 μs, EVB capacitor part numbers added.

©2024-2026 TagoreTech Inc.

Legal Information

Published by

TagoreTech Inc.
601 Campus Drive, Suite B3
Arlington Heights, IL 60004, USA

©2024-2026 All Rights Reserved

TagoreTech is a fabless US semiconductor company specializing in GaN RF solutions: high-power RF switches in unique GaN-on-Si technology, RF power amplifiers in GaN-on-SiC, and reconfigurable front-end solutions — such as tunable power amplifiers and antenna tuning — that combine the two. TagoreTech serves defense, radar, datalink, 5G infrastructure, and public safety markets.

Legal Disclaimer

The information provided in this document is believed to be accurate and reliable, but shall in no event be regarded as a guarantee of conditions or characteristics. TagoreTech makes no warranties, express or implied, including without limitation any implied warranty of merchantability or fitness for a particular purpose. TagoreTech assumes no responsibility for the consequences of the use of this information, nor for any infringement of patents or other rights of third parties which may result from its use. No license is granted by implication or otherwise under any patent or patent rights of TagoreTech. Customers are responsible for validating the suitability of TagoreTech products in their own applications and for compliance with all applicable laws and regulations, including export control requirements. Specifications are subject to change without notice. Errors and omissions excepted.

Use in critical applications. TagoreTech products are not designed or authorized for use in life-support devices or systems, safety-critical applications, or applications where failure could reasonably be expected to cause personal injury, unless expressly agreed in writing by an authorized representative of TagoreTech. Any such use is at the customer's own risk.

Sales Contact

For further information on technology, delivery terms, conditions, and prices, please contact TagoreTech: support@tagoretech.com or contact our distributors or representatives as listed at TagoreTech website. Please click the blue links.

Buy TS72250K directly

DigiKey Digikey TS72250K

RichardsonRFPD An Arrow Company RFPD TS72250K

TS72250K Product information

Please visit TS72250K product page for further information TS72250K Product Page

Latest version of TS72250K datasheet is available for download: TS72250K Datasheet

TagoreTech Inc. Product Brochure and datasheets

Tagore Product Brochure and links to all available datasheets is available for download:
TagoreTech Product Brochure

Scan for the latest datasheet