SP4T 10 W CW GaN Broadband RF Switch 10 MHz to 3.0 GHz

Features

- Frequency Range 10 MHz to 3.0 GHz
- Low insertion loss:
  0.45 dB @ 800 MHz
  0.70 dB @ 2.6 GHz
- High isolation:
  40 dB @ 800 MHz
  27 dB @ 2.6 GHz
- 10 W CW Power handling
- 40 dBm CW hot switching capability
- Low power consumption, less than 1 mW
- No external DC blocking capacitors on RF lines
- All RF ports OFF state
- Versatile 2.6 V – 5.5 V power supply
- Charge pump disabled, −18 V supply needed
- Noise level better than −140 dBm kHz^{-1}

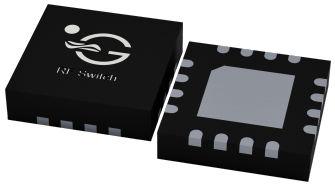

Figure 1: TS72420K in 3.0 x 3.0 mm^2 QFN 16-pin package.

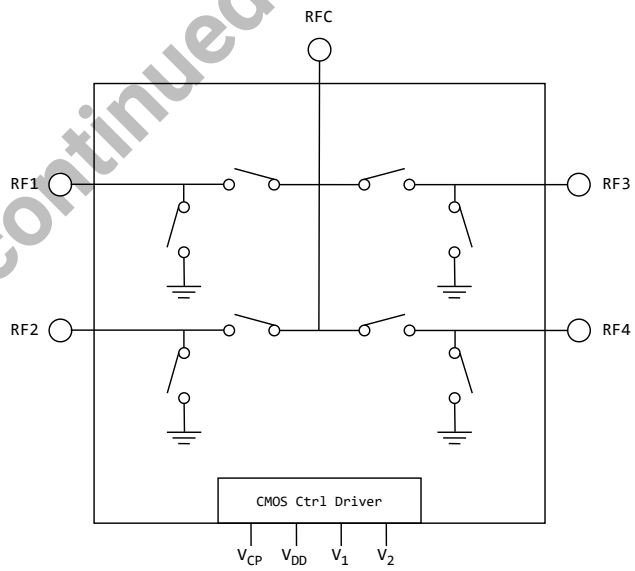

Figure 2: TS72420K functional diagram

To be Discontinued

Applications

- Private mobile radio handsets
- Public safety handsets
- Cellular infrastructure
- Small cells
- LTE relays and microcells
- Satellite terminals

General Description

The TS72420K is a symmetrical reflective Single Pole Four Throw (SP4T) switch designed for broadband, high power switching applications. Its broadband behavior from 10 MHz to 3.0 GHz makes the TS72420K an excellent switch for all applications requiring low insertion loss, high isolation, and high linearity within a small package size. With 10 W CW power handling and 40 dBm CW hot switching capability, the TS72420K is well suited for demanding applications requiring superior RF performance. The TS72420K has the same RF properties as the TS7242FK, except that the internal charge pump has been disabled; an external -18 V supply to the V_{CP} pin is required.

The TS72420K is housed in a compact 3.0×3.0 mm^2 16-lead Quad Flat No-lead (QFN) plastic package.

RoHS

RoHS10/REACH/Halogen free

As replacement, please consider TagoreTech **TS82420K** (TS82420K datasheet).

Contents

Features 1
Applications 1
General Description 1
Ordering information 3
Pin Assignment 4
Absolute Maximum Ratings 5
Electrical Specifications 6
Switching time definition . . . 8
Switch Control table 9
Theory of Operation 11
Isolation modes . . . 11
Device powered off . . . 11
External V_{CP} voltage of -18 V . . . 11
Applications 11
Schematics and Evaluation Board 12
Typical characteristics 14
Device Package information 16
PCB Land Design 17
PCB Stencil Design 19
Tape and Reel Information 20
Glossary 21
Changelog . . . 21
Legal Information 22
Published by . . . 22
Legal Disclaimer . . . 22
Sales Contact . . . 22
Buy TS72420K directly . . . 22
TS72420K Product information . . . 22
TagoreTech Inc. Product Brochure and datasheets . . . 22

©2024-2026 TagoreTech Inc.

Ordering information

Table 1: Ordering Information

Device Part Number	Package Type	Notes
TS72420K	16 Pin 3.0x3.0x0.75 mm^3 QFN	Core part number
TS72420K-EVB	Evaluation Board	
TS72420KMTRPBF[1]	330 mm reel, 3 000 pcs	Full reel

[1] MTRPBF - M: Manufacturing, TR: Tape and Reel, and PBF: lead free.

Table 2: Tape and Reel Information

Form	Quantity	Reel Diameter	Reel Width
Tape and Reel	3 000	13” (330mm)	18mm

©2024-2026 TagoreTech Inc.

Pin Assignment

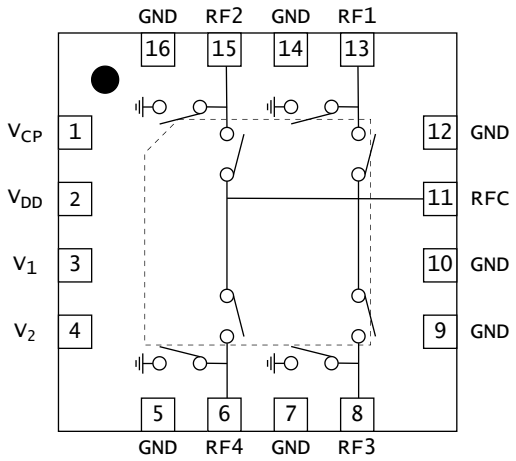

Figure 3: TS72420K pin assignment [top view]

Table 3: Pin Definition

Pin Number	Pin Name	Description
1	V_{CP}	Internal charge pump voltage disabled, -18 V supply needed on this pin.
2	V_{DD}	DC Power Supply
3	V_1	Switch control input 1
4	V_2	Switch control input 2
6	RF4	RF port 4
8	RF3	RF port 3
11	RFC	RF Common port (ANT)
13	RF1	RF port 1
15	RF2	RF port 2
5,7,9,10,12,14,16	GND	Connect to ground[2]
17 [1]	GND	Ground thermal pad, please connect to GND

[1] The backside ground (thermal) pad of the package must be grounded directly to the ground plane of PCB with multiple vias, and adequate heat sinking must be used to ensure proper operation and thermal management.
[2] These pins are NC pins inside the package. To avoid floating pins around RF lines, we request these to be connected to ground.

©2024-2026 TagoreTech Inc.

Absolute Maximum Ratings

Table 4: Absolute Maximum Ratings $T_A = +25$°C unless otherwise specified[1].

Parameter	Symbol	Value	Unit
Electrical Ratings			
Power Supply Voltage	V_{DD}	5.5	V
External bias voltage on V_{CP} pin	V_{CP}	-20	V
Storage Temperature Range	T_{st}	−55 – 125	°C
Operating Temperature Range	T_{op}	−40 – 85	°C
Maximum Junction Temperature	T_j	+140	°C
Maximum RF CW input power, 800 MHz	RFx	42	dBm
Thermal Ratings			
Thermal Resistance (junction-to-case) – Bottom side	$R_{\theta jc}$	25	°C/W
Thermal Resistance (junction-to-top)	$R_{\theta jt}$	$\leq$39	°C/W
Soldering Temperature	T_{solder}	+260	°C
ESD Ratings			
Human Body Model (HBM)	Level 1B	500 – $<$1000	V
Charged Device Model (CDM)	Level C3	$\geq$1000	V
Moisture Rating			
Moisture Sensitivity Level[2]	MSL	1	

[1] Maximum ratings are absolute ratings. Exposure to absolute maximum rating conditions for extended periods may affect device reliability and can cause permanent damage to the device. Exceeding one or a combination of the absolute maximum ratings may cause permanent and irreversible damage to the device and/or to surrounding circuit. Functional operation of the device is not implied in any conditions above those indicated in the Electrical Specifications section.

[2] Tagore recommends to store parts in moisture barrier bag to preserve solderability.

©2024-2026 TagoreTech Inc.

Electrical Specifications

Table 5: Electrical Specifications $T_A = +25°C; V_{DD} = +3.3V; 50\Omega$ Source/Load.

Parameter	Condition	Minimum	Typical	Maximum	Unit
Operating frequency[1]	f	10		3000	MHz
Insertion loss	400 MHz		0.35		dB
$RFC - RFx$	800 MHz		0.45	0.60	dB
	1.95 GHz		0.60	0.75	dB
	2.6 GHz		0.70	0.85	dB
Isolation	400 MHz		43		dB
$RFC - RFx$	800 MHz	36	40		dB
	1.95 GHz	28	30		dB
	2.6 GHz	25	27		dB
Return Loss	400 MHz		-25		dB
$RFC - RFx$	800 MHz		-23		dB
	1.95 GHz		-16		dB
	2.6 GHz		-14		dB

[1] No external DC blocking capacitors are required on RF pins unless DC voltage is applied on a RF pin.

©2024-2026 TagoreTech Inc.

Table 6: Electrical Specifications $T_A = +25°C; V_{DD} = +3.3V; 50\Omega$ Source/Load.

Parameter	Condition	Minimum	Typical	Maximum	Unit
Operating frequency	f	10		3000	MHz
Harmonic Distortion					
H_2	800MHz, P_{in} =35dBm		-77		dBc
H_3	800MHz, P_{in} =35dBm		-80		dBc
IIP3	800MHz		70		dBm
Power and Compression point					
$P_{0.1dB}$[2]	800MHz, CW	40	42		dBm
P_{maxhot}[3]	Max RF CW Power, hot switching		40		dBm
Noise					
Noise level[7]	RBW=1kHz		-140		dBm
Switching Time					
t_{SW}	50% CTRL to 10/90% RF value, $V_{CP} = -18$ V		0.65		μs
Power Supply, DC					
Power supply[5]	V_{CP}	-19	-18	-17	V
Power supply[6]	I_{CP}			100	μA
Control voltage	Power Supply V_{DD}	2.6	3.3	5.5	V
	All control pins high[4], V_{ih}	1.0	3.3	5.25	V
	All control pins low, V_{il}	-0.3		0.5	V
Control current	All control pins high, I_{ih}			7.5	μA
	All control pins low, I_{il}		0		μA
Current consumption	I_{DD}, active mode (V_{DD} on)		160	200	μA

[2] $P_{0.1dB}$ is a figure of merit. Please do not exceed Absolute Maximum ratings.
[3] The device supports RF signal hot switching with +40 dBm CW input power.
[4] Control voltage V_{ih} cannot be higher than V_{DD} (to avoid forward biasing of ESD diode)
[5] TS72420K internal charge pump is disabled and an external -18 V supply to V_{CP} is required for operation. V_{DD} should be applied first before V_{CP}, with a delay of 1 ms; shutdown in opposite order.
[6] Static consumption. Depends on the pulse repetition rate, up to 10 mA with 20 kHz pulse repetition rate.
[7] Internal charge pump is disabled; there is no charge pump switching noise. Noise level is valid over the whole operating frequency range.

©2024-2026 TagoreTech Inc.

Switching time definition

Example of the definition by using 10 W/40 dBm signal. We apply 10W signal to RF port, stabilized with isolator. Isolator is needed as our switch shows to RF port approximately 4Ω impedance. Let's assume that the switch insertion loss is 0.3 dB. Therefore 90% of the RF signal is 39.55 dBm and 10% of the RF signal is 1W/30dBm. We need to take into account 0.3dB insertion loss, therefore numbers are 39.25 dBm and 29.7 dBm respectively. We change the control from low to high and our time reference point is when our control signal exceeds lower threshold value V_{ihlow}. In certain measurements when control signal rise time is significantly shorter than RF output signal, we approximate start of the clock with the 50% point of the control signal.

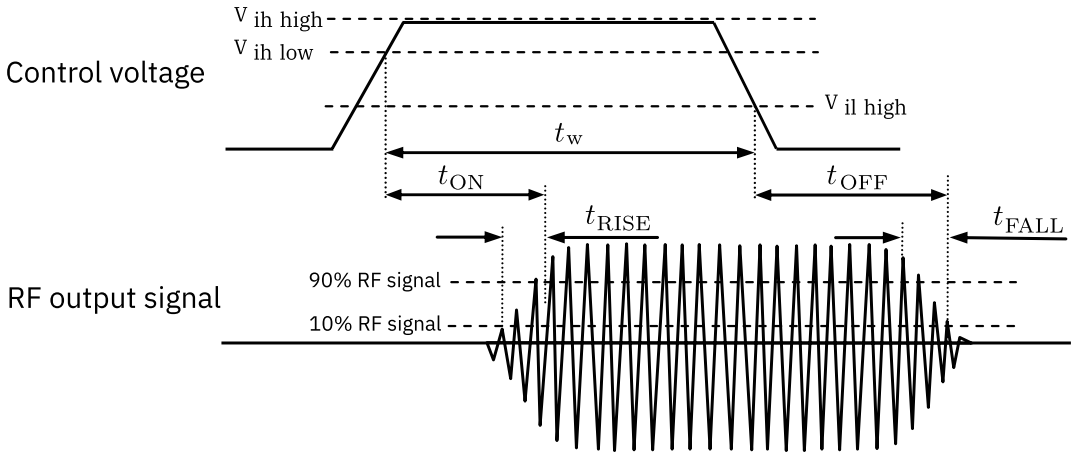

Figure 4: Switching time definition, t_{ON}, t_{OFF}, t_{RISE}, t_{FALL}. Minimum pulse width t_w.

In the TS72420K, the internal charge pump is disabled and an external -18 V supply to V_{CP} is required. Maximum pulse repetition rate f_{PRR} defines the maximum frequency for switching events. With the external -18 V supply, the switch can be driven at least to 20 kHz f_{PRR}. Expect current consumption of 10 mA from the -18 V supply.

©2024-2026 TagoreTech Inc.

Switch Control table

Table 7: Switch Control Table

V_{DD}[1]	V_2	V_1	**Switch state**
1	0	0	$RFC - RF1$ ON[2]
1	0	1	$RFC - RF2$ ON
1	1	0	$RFC - RF3$ ON
1	1	1	$RFC - RF4$ ON
0	0	0	V_{DD} off (Isolation), all FETs are on, short shown to RFC and RF ports

[1] V_{DD} should be applied first before V_1 and V_2, otherwise may cause damage to the device.
[2] There are internal pull-downs to ground on both V_1 and V_2 control pins, the state at start-up without any control voltage applied will be $RFC - RF1$ ON.
[3] V_{DD} should be applied first before V_{CP}, with a delay of 1 ms. Shutdown should be in opposite order.

©2024-2026 TagoreTech Inc.

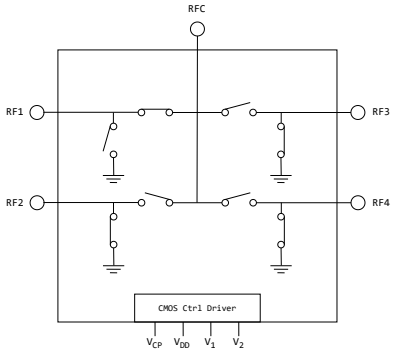

RFC-RF1 ON

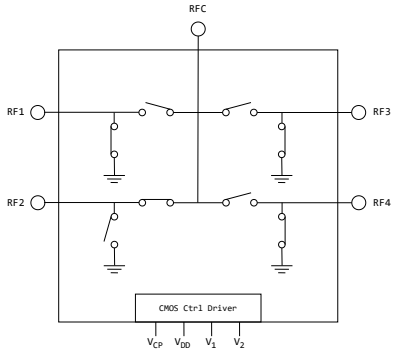

RFC-RF2 ON

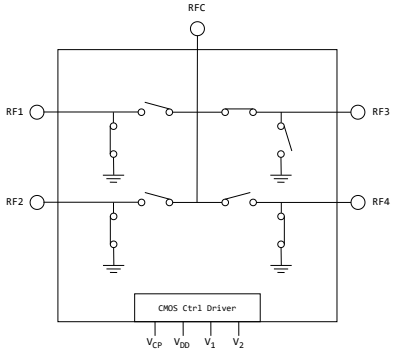

RFC-RF3 ON

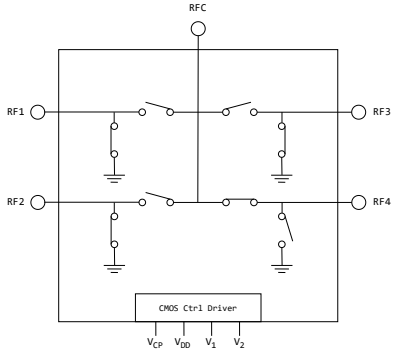

RFC-RF4 ON

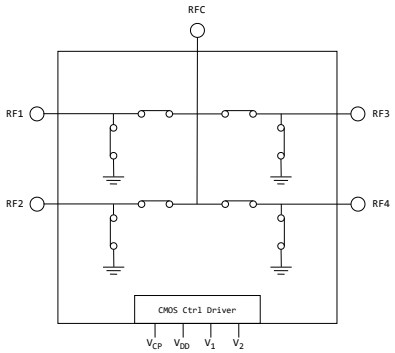

V_{DD} off state

©2024-2026 TagoreTech Inc.

Theory of Operation

Isolation modes

TS72420K has one isolation mode, VDD off mode.

Device powered off

When V_{DD} is 0V, all switch RF transistors are on, ie. every MOSFET is on. This means that series MOSFETs and shunt MOSFETs are conducting. Every RF port is essentially connected to ground, including ANT port. This is practical when device is directly connected to ANT, there is certain protection against induced electrical fields. This can partially protect radio equipment against electrical fields, when device is not in usage.

External V_{CP} voltage of -18 V

TS72420K requires an external voltage supply to V_{CP}, as the internal charge pump is disabled. The external supply supports pulse repetition rate f_{PRR} of more than 20 kHz, in some cases even up to 100 kHz. It is mandatory to supply first V_{DD}, have a delay of 1 ms and then apply -18 V to V_{CP}. Shutdown should be in opposite order.

Applications

TS72420K is offering 10 W CW capability from 10 MHz to 3.0 GHz frequency band. Applications include narrowband and multi-octave wideband radios, public mobile radios, industrial and scientific applications. In the past, such applications were covered with power hungry and complex PIN diodes, TS72420K significantly reduces design complexity for such RF switching needs. TS72420K does not require external matching components.

©2024-2026 TagoreTech Inc.

Schematics and Evaluation Board

Only two external components are recommended, 1 nF for V_{CP} and 10 nF for V_{DD} lines. Pin 17 in the schematic refers to the center (thermal) pad of the device.

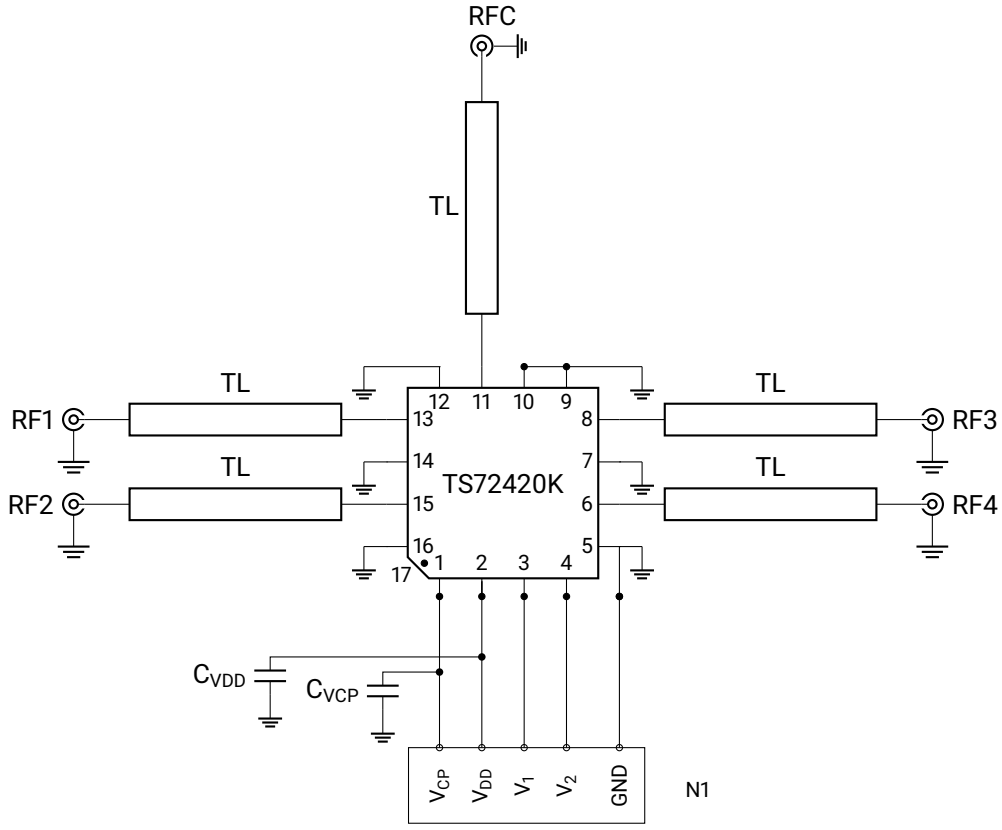

Schematics of TS72420K EVB

Table 8: Components used for TS72420K EVB

Reference	Part number / Value	Description	Notes
C_{VDD}	10 nF	Capacitor	
C_{VCP}	1 nF	Capacitor	

©2024-2026 TagoreTech Inc.

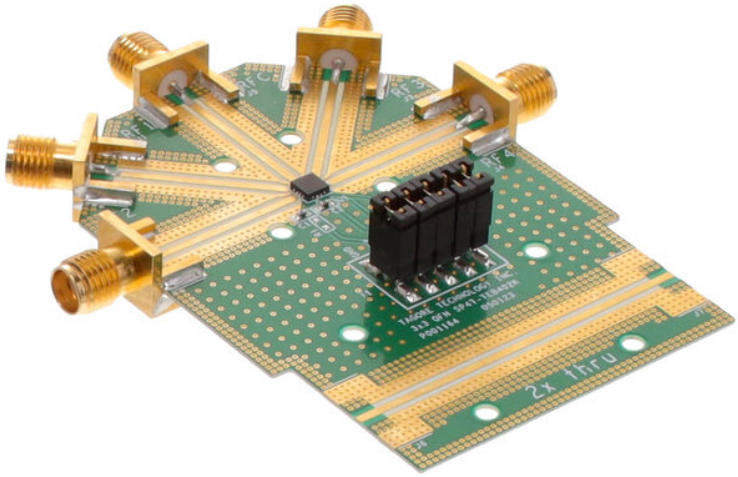

Photo of TS72420K EVB

©2024-2026 TagoreTech Inc.

Typical characteristics

These measurements have been taken from TS7242FK EVB; the TS72420K RF performance is identical.

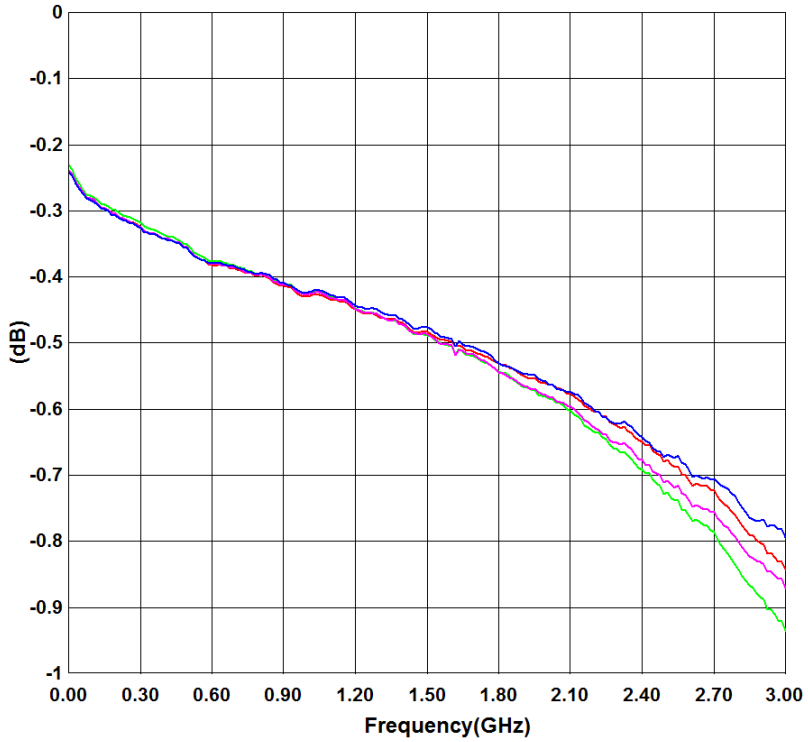

Insertion loss, RFC – RFx.

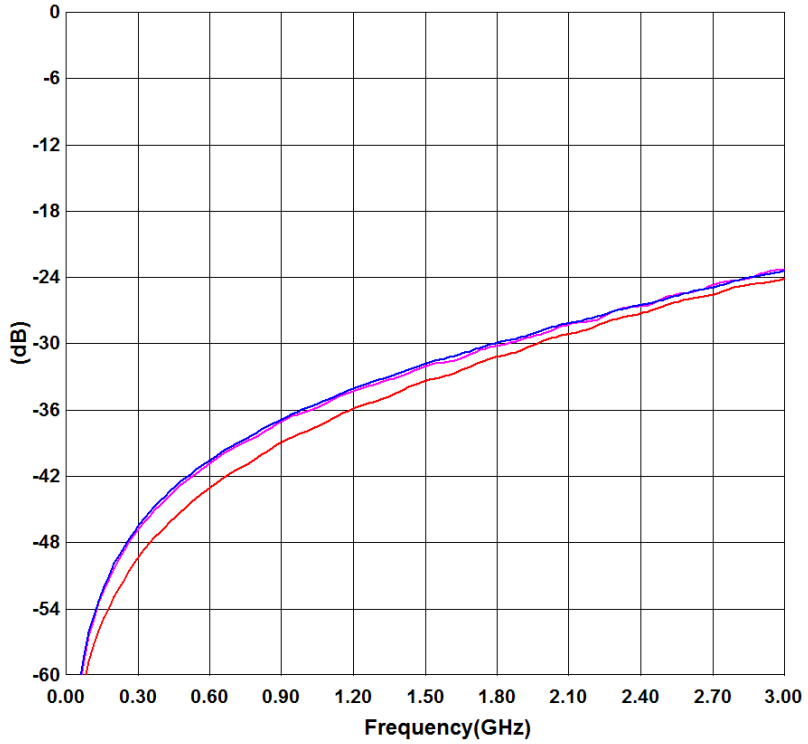

Isolation, RFC – RFx.

©2024-2026 TagoreTech Inc.

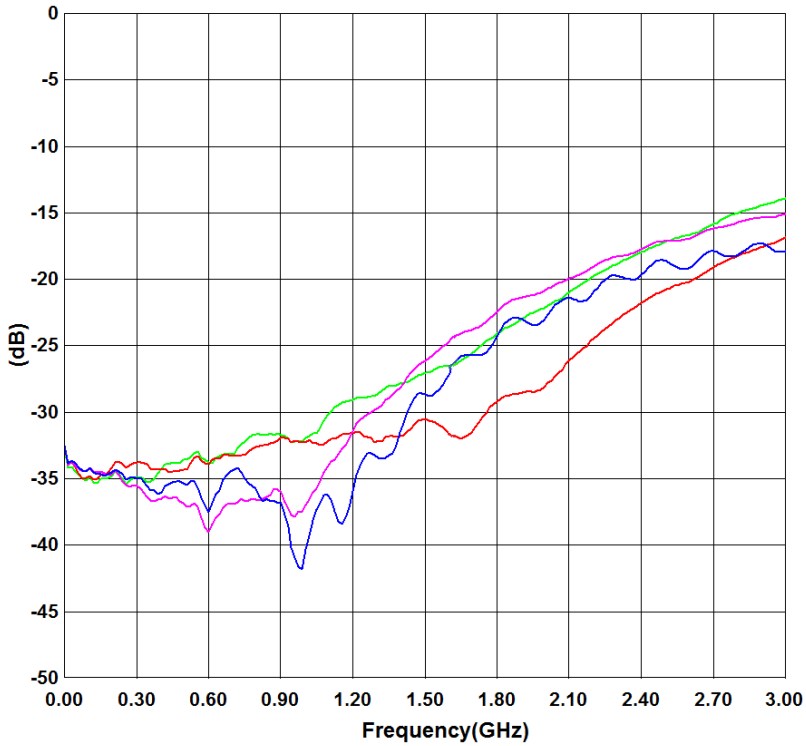

RFx Return loss.

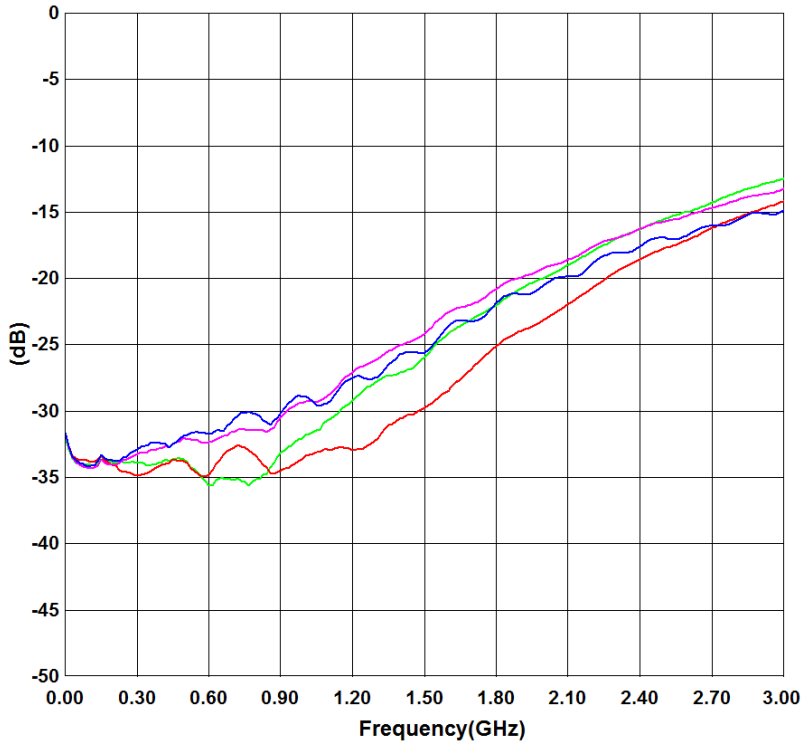

RFC (Antenna port) Return loss.

©2024-2026 TagoreTech Inc.

Device Package information

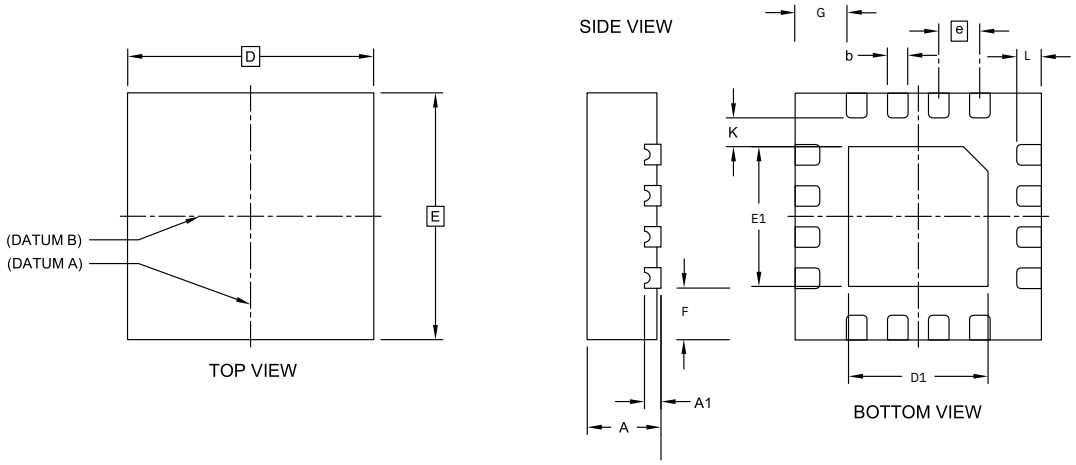

Figure 6: 16-pin QFN 3.0 x 3.0 x 0.75 mm^3 package drawing.

Please refer to application notes TN-001 and TN-002 at TagoreTech web page for PCB and soldering guidelines.

Table 9: Device Package Dimensions

Dimension	Value [mm]	Tolerance [mm]	Dimension	Value [mm]	Tolerance [mm]
A	0.75	±0.05	E	3.00 BSC	±0.05
A1	0.203	±0.02	E1	1.70	±0.05
b	0.25	+0.05/-0.07	F	0.625	±0.05
D	3.00 BSC	±0.05	G	0.625	±0.05
D1	1.70	±0.05	L	0.25	±0.05
e	0.50 BSC	±0.05	K	0.40	±0.05

Lead finish: Pure Sn without underlayer; thickness 7.5 μm – 20 μm (typical 10 – 12 μm).

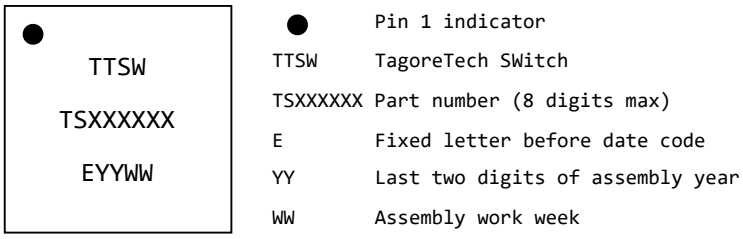

Figure 7: Part marking specification.

©2024-2026 TagoreTech Inc.

PCB Land Design

Notes:

- 4-layer PCB is recommended.
- Via diameter is recommended to be 0.2mm to prevent solder wicking inside the vias.
- Thermal vias shall only be placed on the center pad.
- The maximum via number for the center pad is 3(X)×3(Y)=9.

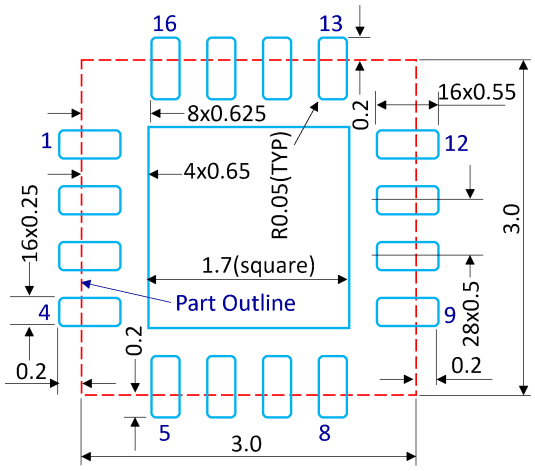

Figure 8: PCB land pattern, dimensions in [mm].

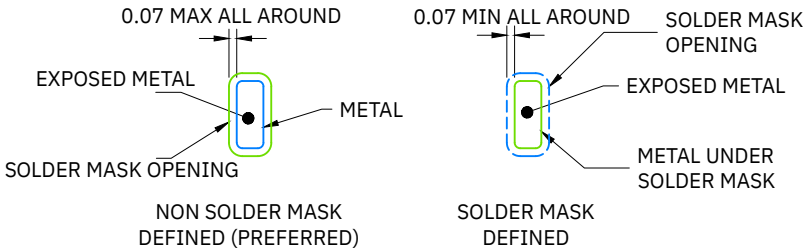

Figure 9: Solder mask opening, dimensions in [mm].

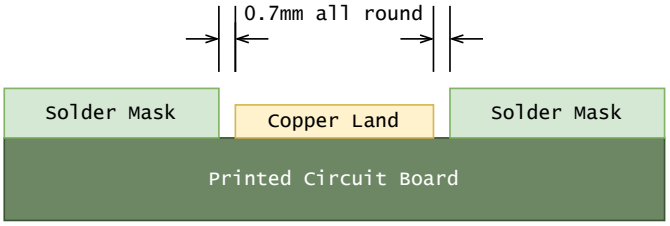

Figure 10: Preferred solder mask opening, side view, dimensions in [mm].

©2024-2026 TagoreTech Inc.

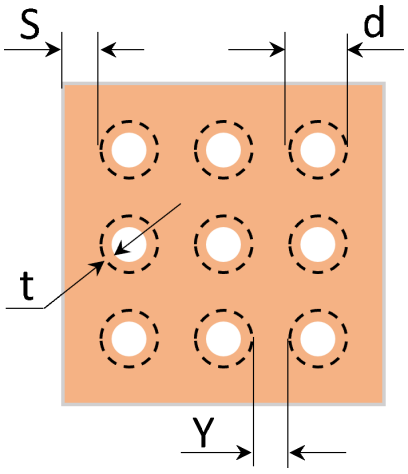

Figure 11: Thermal Via Pattern, Recommended Values: S≥0.15mm; Y≥0.20mm; d=0.2mm; Plating Thickness t=25μm or 50μm.

©2024-2026 TagoreTech Inc.

PCB Stencil Design

Notes:

- Laser-cut, stainless steel stencil is recommended with electro-polished trapezoidal walls to improve the paste release.
- Stencil thickness is recommended to be 125μm.

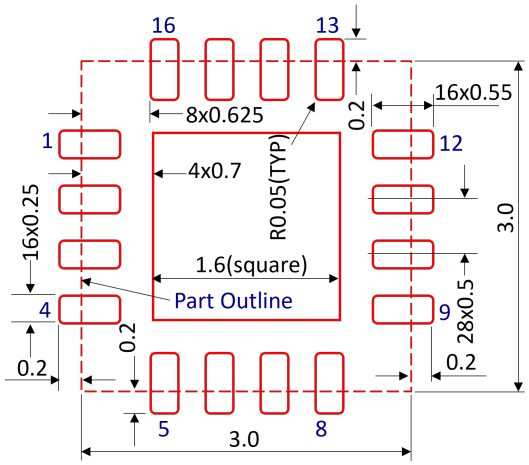

Figure 12: Stencil Openings, dimensions in [mm].

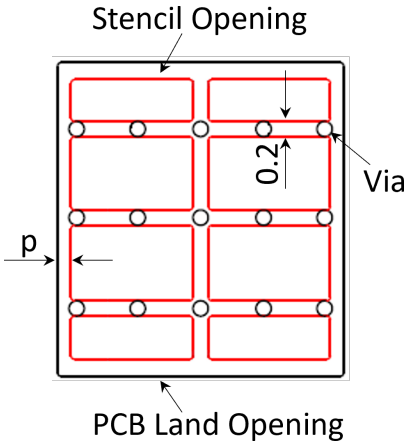

Figure 13: Stencil Openings Shall not Cover Via Areas If Possible, dimensions in [mm].

©2024-2026 TagoreTech Inc.

Tape and Reel Information

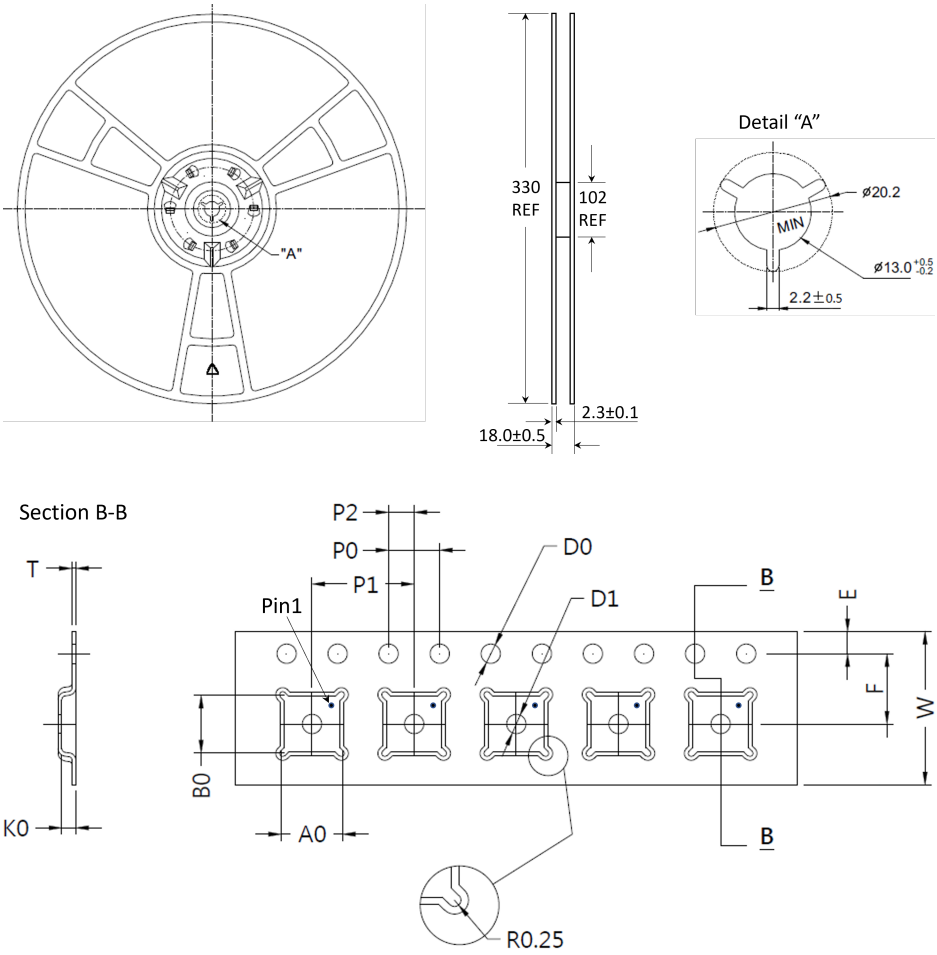

A0[mm]	B0[mm]	D0[mm]	D1[mm]	E[mm]	F[mm]	K0[mm]	P0[mm]	P1[mm]	P2[mm]	T[mm]	W[mm]
3.35	3.35	1.50	1.50	1.75	5.50	1.10	4.00	8.00	2.00	0.30	12.00

©2024-2026 TagoreTech Inc.

Glossary

IL	Insertion loss
ISO	Isolation
RL	Return loss
VSWR	Voltage Standing Wave Ratio
RFC	RF Common port, sometimes referred to as ANT
RFx	RF Port number x
Unitarity	Describes power absorption of the component, $1-\|S_{11}\|^2-\|S_{21}\|^2-\|S_{31}\|^2-\|S_{41}\|^2-\|S_{51}\|^2$ here with SP4T

Changelog

Table 10: Changelog

Date	Revision	Notes
09/21/2026	3.00	Initial release of TS72420K, derived from TS7242FK datasheet (identical RF performance); internal charge pump disabled, external -18 V supply required; marked To be Discontinued (replacement part TS8242FK).

©2024-2026 TagoreTech Inc.

Legal Information

Published by

TagoreTech Inc.
601 Campus Drive, Suite B3
Arlington Heights, IL 60004, USA

©2024-2026 All Rights Reserved

TagoreTech is a fabless US semiconductor company specializing in GaN RF solutions: high-power RF switches in unique GaN-on-Si technology, RF power amplifiers in GaN-on-SiC, and reconfigurable front-end solutions — such as tunable power amplifiers and antenna tuning — that combine the two. TagoreTech serves defense, radar, datalink, 5G infrastructure, and public safety markets.

Legal Disclaimer

The information provided in this document is believed to be accurate and reliable, but shall in no event be regarded as a guarantee of conditions or characteristics. TagoreTech makes no warranties, express or implied, including without limitation any implied warranty of merchantability or fitness for a particular purpose. TagoreTech assumes no responsibility for the consequences of the use of this information, nor for any infringement of patents or other rights of third parties which may result from its use. No license is granted by implication or otherwise under any patent or patent rights of TagoreTech. Customers are responsible for validating the suitability of TagoreTech products in their own applications and for compliance with all applicable laws and regulations, including export control requirements. Specifications are subject to change without notice. Errors and omissions excepted.

Use in critical applications. TagoreTech products are not designed or authorized for use in life-support devices or systems, safety-critical applications, or applications where failure could reasonably be expected to cause personal injury, unless expressly agreed in writing by an authorized representative of TagoreTech. Any such use is at the customer's own risk.

Sales Contact

For further information on technology, delivery terms, conditions, and prices, please contact TagoreTech: support@tagoretech.com or contact our distributors or representatives as listed at TagoreTech website. Please click the blue links.

Buy TS72420K directly

DigiKey	Digikey TS72420K
RichardsonRFPD An Arrow Company	RFPD TS72420K

TS72420K Product information

Please visit TS72420K product page for further information TS72420K Product Page

Latest version of TS72420K datasheet is available for download: TS72420K Datasheet

TagoreTech Inc. Product Brochure and datasheets

Tagore Product Brochure and links to all available datasheets is available for download:
TagoreTech Product Brochure