SPDT 20 W CW GaN Broadband RF Switch 10 MHz to 6.0 GHz

Not recommended for new designs. Please replace the TS7321FK with the TagoreTech **TS8423K** (1 MHz to 7.2 GHz, 20 W CW, 60 W peak, 3×3 mm QFN-16): TS8423K product page, TS8423K datasheet.

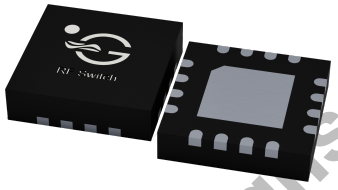

Figure 1: TS7321FK in 3.0 x 3.0 mm^2 QFN 16-pin package.

Features

- Frequency Range 10 MHz to 6.0 GHz
- Low insertion loss: 0.35 dB @ 800 MHz
- High isolation: 45 dB @ 800 MHz
- High peak power handling capability
- 41 dBm CW hot switching capability
- No external DC blocking capacitors on RF lines
- All RF ports OFF state
- Versatile 2.6 V – 5.5 V power supply

Applications

- Private mobile radio handsets
- Public safety handsets
- Cellular infrastructure
- Small cells
- LTE relays and microcells
- Satellite terminals

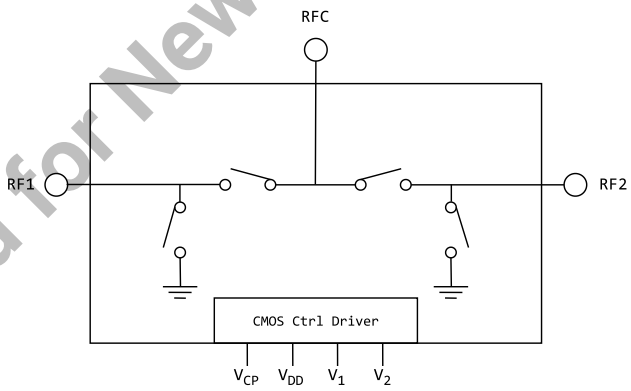

Figure 2: TS7321FK functional diagram

RoHS10/REACH/Halogen free

General Description

The TS7321FK is a symmetrical reflective Single Pole Double Throw (SPDT) switch designed for broadband, high peak power switching applications. Its broadband behavior from 10 MHz to 6.0 GHz makes the TS7321FK an excellent switch for all applications requiring low insertion loss, high isolation, and high linearity within a small package size.

The TS7321FK is housed in a compact 3.0×3.0 mm^2 16-lead Quad Flat No-lead (QFN) plastic package.

The TS7321FK is not recommended for new designs; please consider the TS8423K.

Not Recommended for New Designs

For new designs, please consider TagoreTech **TS8423K** (TS8423K datasheet).

Scan for the TS8423K datasheet

Contents

Features 1
Applications 1
General Description 1
Ordering information 3
Pin Assignment 4
Absolute Maximum Ratings 5
Electrical Specifications 6
Switching time definition . . . 8
Switch Control table 9
Theory of Operation 10
Feeding external V_{CP} voltage of -18 V . . . 10
Schematics and Evaluation Board 10
Typical characteristics 12
Device Package information 14
PCB Land Design 16
PCB Stencil Design 18
Tape and Reel Information 19
Glossary 20
Changelog . . . 20
Legal Information 21
Published by . . . 21
Legal Disclaimer . . . 21
Sales Contact . . . 21
Recommended replacement: TS8423K . . . 21
Buy TS7321FK and TS8423K directly . . . 21
TS7321FK Product information . . . 21
TagoreTech Inc. Product Brochure and datasheets . . . 21

©2024-2026 TagoreTech Inc.

Ordering information

Table 1: Ordering Information

Device Part Number	Package Type	Notes
TS7321FK	16 Pin 3.0x3.0x0.75 mm^3 QFN	Core part number, not recommended for new designs
TS7321FK-EVB	Evaluation Board	
TS7321FKMTRPBF[1]	330 mm reel, 3 000 pcs	Full reel

[1] MTRPBF - M: Manufacturing, TR: Tape and Reel, and PBF: lead free.
The TS7321FK is not recommended for new designs; please consider the TS8423K.

Table 2: Tape and Reel Information

Form	Quantity	Reel Diameter	Reel Width
Tape and Reel	3 000	13” (330mm)	18mm

©2024-2026 TagoreTech Inc.

Pin Assignment

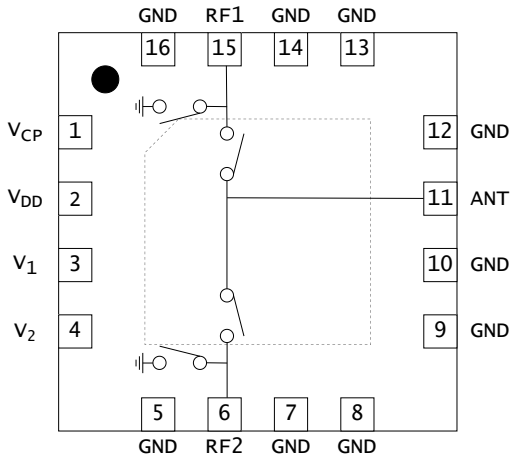

Figure 3: TS7321FK pin assignment [top view]

Table 3: Pin Definition

Pin Number	Pin Name	Description
1	V_{CP}	Internal charge pump voltage output, connect a 1 nF capacitor to GND on this pin to improve switching time.
2	V_{DD}	DC Power Supply
3	V_1	Switch control input 1
4	V_2	Switch control input 2
6	RF2	RF port 2
5,7,8,9,10,12,13,14,16	GND	Connect to ground[2]
11	RFC	RF Common port (Antenna port)
15	RF1	RF port 1
17 [1]	GND	Ground thermal pad, please connect to GND

[1] The backside ground (thermal) pad of the package must be grounded directly to the ground plane of PCB with multiple vias, and adequate heat sinking must be used to ensure proper operation and thermal management.
[2] These pins are NC pins inside the package. To avoid floating pins around RF lines, we request these to be connected to ground.

©2024-2026 TagoreTech Inc.

Absolute Maximum Ratings

Table 4: Absolute Maximum Ratings $T_A = +25$°C unless otherwise specified[1].

Parameter	Symbol	Value	Unit
Electrical Ratings			
Power Supply Voltage	V_{DD}	5.5	V
External bias voltage on V_{CP} pin	V_{CP}	-20	V
Storage Temperature Range	T_{st}	−55 – 125	°C
Operating Temperature Range	T_{op}	−40 – 85	°C
Maximum Junction Temperature	T_j	+140	°C
Maximum RF CW input power, 800 MHz, T_J=+85°C	RFx	43	dBm
Maximum RF CW input power, $>$5 GHz, T_J=+85°C	RFx	41	dBm
Thermal Ratings			
Thermal Resistance (junction-to-case) – Bottom side	$R_{\theta jc}$	25	°C/W
Thermal Resistance (junction-to-top)	$R_{\theta jt}$	$\leq$39	°C/W
Soldering Temperature	T_{solder}	+260	°C
ESD Ratings			
Human Body Model (HBM)	Level 1B	500 – $<$1000	V
Charged Device Model (CDM)	Level C3	$\geq$1000	V
Moisture Rating			
Moisture Sensitivity Level[2]	MSL	1	

[1] Maximum ratings are absolute ratings. Exposure to absolute maximum rating conditions for extended periods may affect device reliability and can cause permanent damage to the device. Exceeding one or a combination of the absolute maximum ratings may cause permanent and irreversible damage to the device and/or to surrounding circuit. Functional operation of the device is not implied in any conditions above those indicated in the Electrical Specifications section.

[2] Tagore recommends to store parts in moisture barrier bag to preserve solderability.

©2024-2026 TagoreTech Inc.

Electrical Specifications

Table 5: Electrical Specifications $T_A = +25°C; V_{DD} = +3.3V; 50\Omega$ Source/Load.

Parameter	Condition	Minimum	Typical	Maximum	Unit
Operating frequency[1]	f	10		6000	MHz
Insertion loss	400 MHz		0.30		dB
RFC – RFx	800 MHz		0.35	0.45	dB
	1.95 GHz		0.40	0.60	dB
	2.6 GHz		0.45	0.70	dB
	6.0 GHz		0.90		dB
Isolation	400 MHz		50		dB
RFC – RFx	800 MHz	40	45		dB
	1.95 GHz	30	35		dB
	2.6 GHz	27	32		dB
	6.0 GHz		17		dB
Return Loss	400 MHz		-25		dB
RFC – RFx	800 MHz		-25		dB
	1.95 GHz		-25		dB
	2.6 GHz		-25		dB
	6.0 GHz		-13		dB

[1] No external DC blocking capacitors are required on RF pins unless DC voltage is applied on a RF pin.

©2024-2026 TagoreTech Inc.

Table 6: Electrical Specifications $T_A = +25°C; V_{DD} = +3.3V; 50\Omega$ Source/Load.

Parameter	Condition	Minimum	Typical	Maximum	Unit
Operating frequency	f	10		6000	MHz
Harmonic Distortion					
H_2	800MHz, P_{in} =35dBm		-81		dBc
H_3	800MHz, P_{in} =35dBm		-81		dBc
IIP3	800MHz		73		dBm
Power and Compression point					
$P_{0.1dB}$[3]	800MHz, CW	43	44		dBm
$P_{maxpeak}$[2]	Max RF Peak Power, 800 MHz, pulsed		47		dBm
P_{maxhot}[4]	Max RF CW Power, hot switching		41		dBm
Switching Time					
t_{SW} , $C_{VCP} = 1nF$	50% control to 10/90% of settled RF value		0.8		μs
Power Supply, DC					
Control voltage	Power Supply V_{DD}	2.6	3.3	5.5	V
	All control pins high[5], V_{ih}	1.0	3.3	5.25	V
	All control pins low, V_{il}	-0.3		0.5	V
Control current	All control pins high, I_{ih}			7.5	μA
	All control pins low, I_{il}		0		μA
Current consumption	I_{DD}, active mode (V_{DD} on)		160	200	μA

[2] 1% duty cycle and 10 μs frame width. Peak $P_{0.1dB}$.
[3] $P_{0.1dB}$ is a figure of merit. Please do not exceed Absolute Maximum ratings.
[4] The device supports RF signal hot switching with +41 dBm CW input power.
[5] Control voltage V_{ih} cannot be higher than V_{DD} (to avoid forward biasing of ESD diode)

©2024-2026 TagoreTech Inc.

Switching time definition

Example of the definition by using 10 W/40 dBm signal. We apply 10W signal to RF port, stabilized with isolator. Isolator is needed as our switch shows to RF port approximately 4Ω impedance. Let's assume that the switch insertion loss is 0.3 dB. Therefore 90% of the RF signal is 39.55 dBm and 10% of the RF signal is 1W/30dBm. We need to take into account 0.3dB insertion loss, therefore numbers are 39.25 dBm and 29.7 dBm respectively. We change the control from low to high and our time reference point is when our control signal exceeds lower threshold value V_{ihlow}. In certain measurements when control signal rise time is significantly shorter than RF output signal, we approximate start of the clock with 50% point of the control signal.

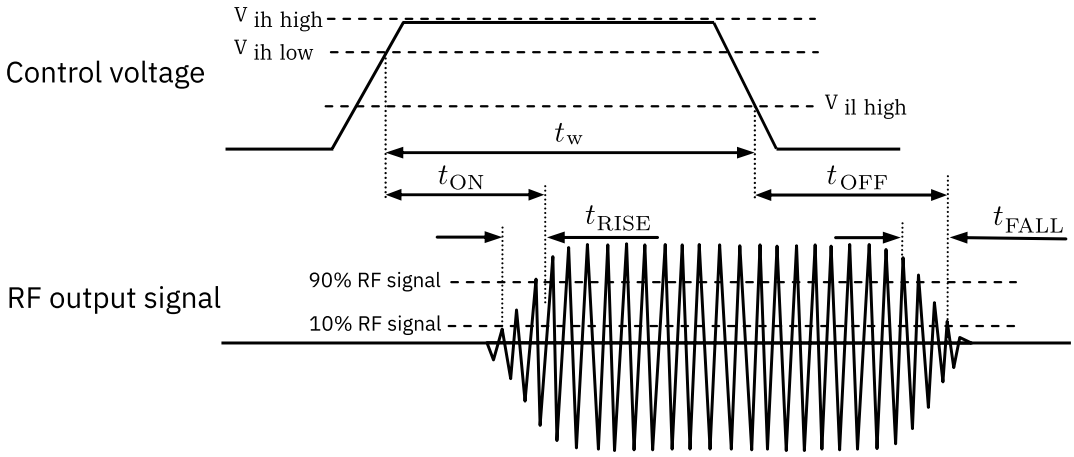

Figure 4: Switching time definition, t_{ON}, t_{OFF}, t_{RISE}, t_{FALL}. Minimum pulse width t_w.

Our component uses integrated charge pump. Maximum pulse repetition rate defines what is maximum frequency for switching events. Please do not exceed given maximum frequency. By feeding external -18 V to V_{CP}, one can improve maximum pulse repetition rate f_{PRR}. Feeding external -18V to V_{CP}, one can drive switch at least to 20kHz f_{PRR}. Expect current consumption of 10mA of -18V.

©2024-2026 TagoreTech Inc.

Switch Control table

Table 7: Switch Control Table

V_{DD}[1]	V_2	V_1	**Switch state**
1	0	0	$RFC - RF1$ ON[2]
1	0	1	$RFC - RF2$ ON
1	1	0	ISO (Isolation state)[3]
0	0	0	V_{DD} off state

[1] V_{DD} should be applied first before V_1 and V_2, otherwise may cause damage to the device.
[2] There are internal pull-downs to ground on both V_1 and V_2 control pins, the state at start-up without any control voltage applied will be $RFC - RF1$ ON.
[3] If ISO state is not used, the switch can be operated with single control pin V_1

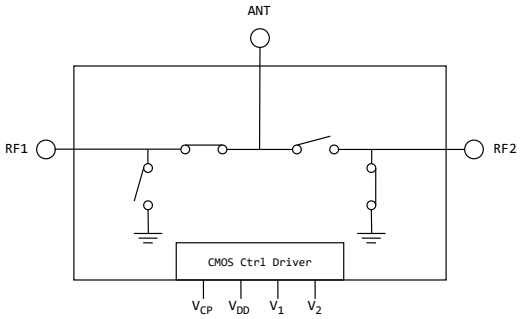

RFC-RF1 ON

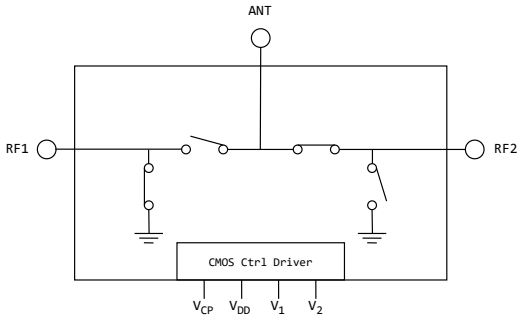

RFC-RF2 ON

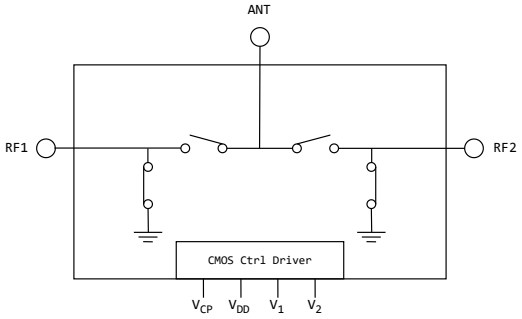

ISO (Isolation state)

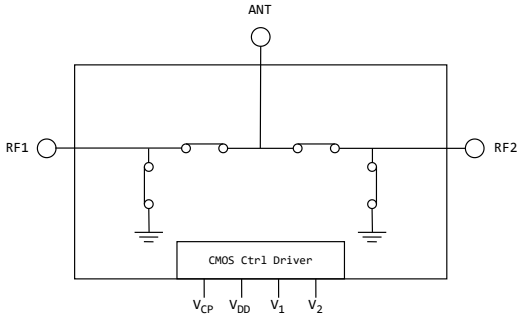

V_{DD} off state

©2024-2026 TagoreTech Inc.

Theory of Operation

Feeding external V_{CP} voltage of -18 V

TS7321FK supports external voltage supply to V_{CP} to increase pulse repetition rate f_{PRR}. With external voltage supply, f_{PRR} can be increased at least to support pulse repetition rate more than 20 kHz, in some cases even up to 100 kHz. In order to use external voltage, it is mandatory to supply first V_{DD}, have a delay of 1 ms and then apply -18 V to V_{CP}. Shutdown should be in opposite order.

Schematics and Evaluation Board

Only two external components are recommended, 1 nF for V_{CP} and 10 nF for V_{DD} lines. Pin 17 in the schematic refers to the center (thermal) pad of the device.

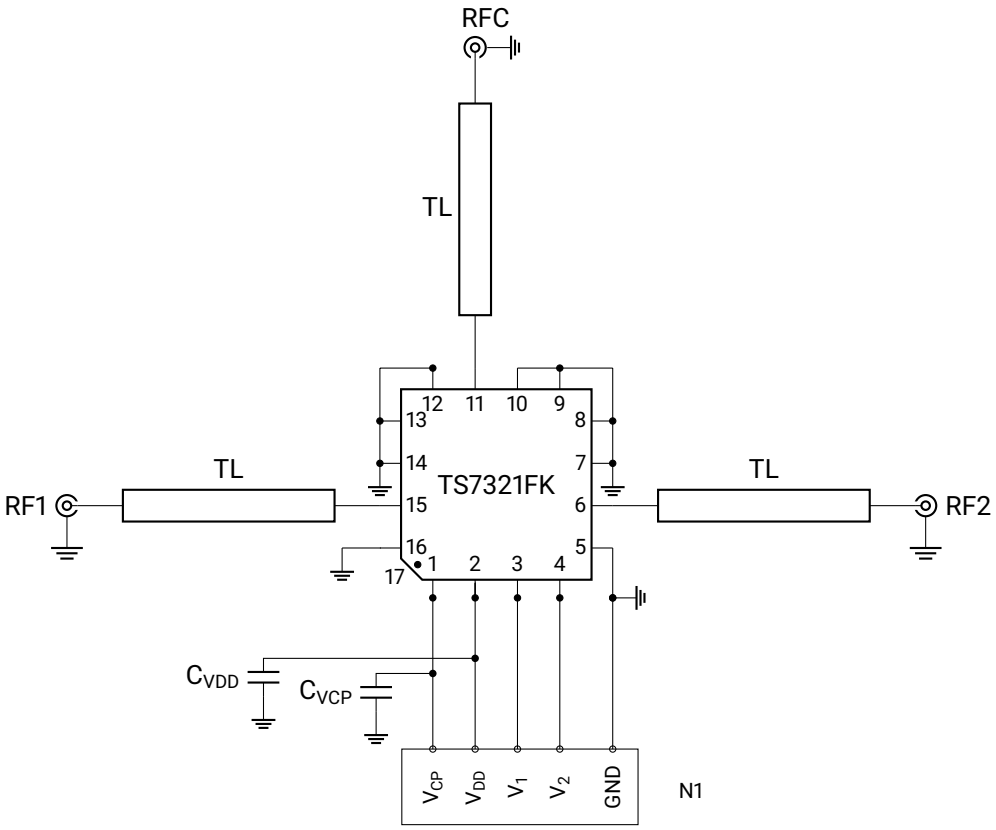

Schematics of TS7321FK EVB

Table 8: Components used for TS7321FK EVB

Reference	Part number / Value	Description	Notes
C_{VDD}	10nF	Capacitor	
C_{VCP}	1nF	Capacitor	

©2024-2026 TagoreTech Inc.

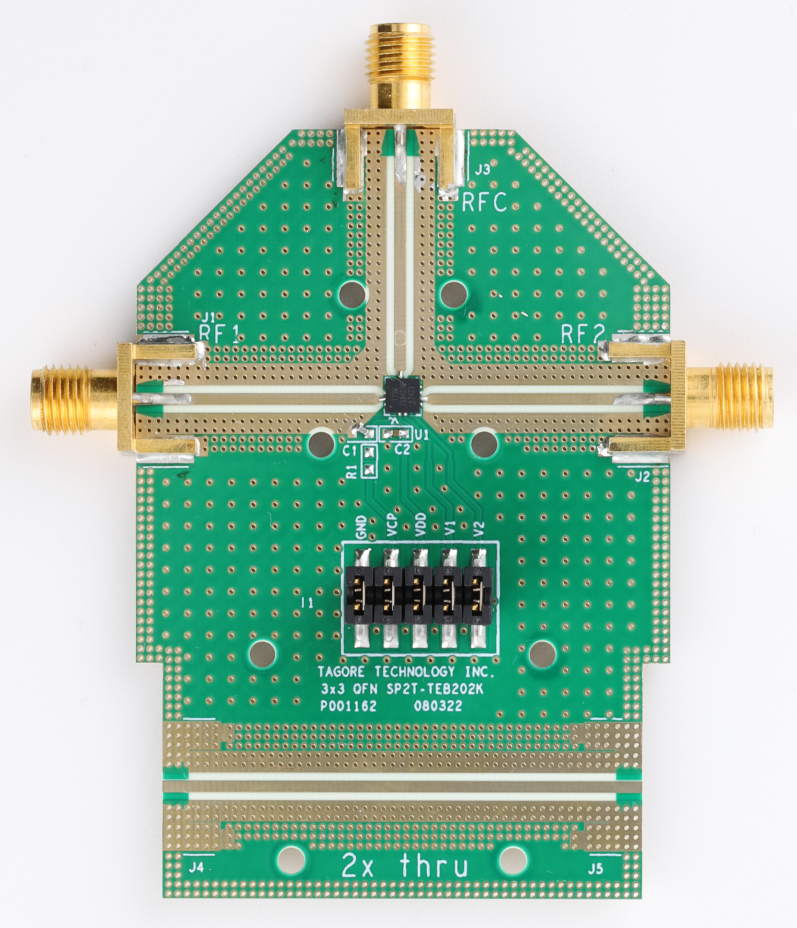

Photo of TS7321FK EVB

©2024-2026 TagoreTech Inc.

Typical characteristics

These measurements have been taken from TS7321FK EVB.

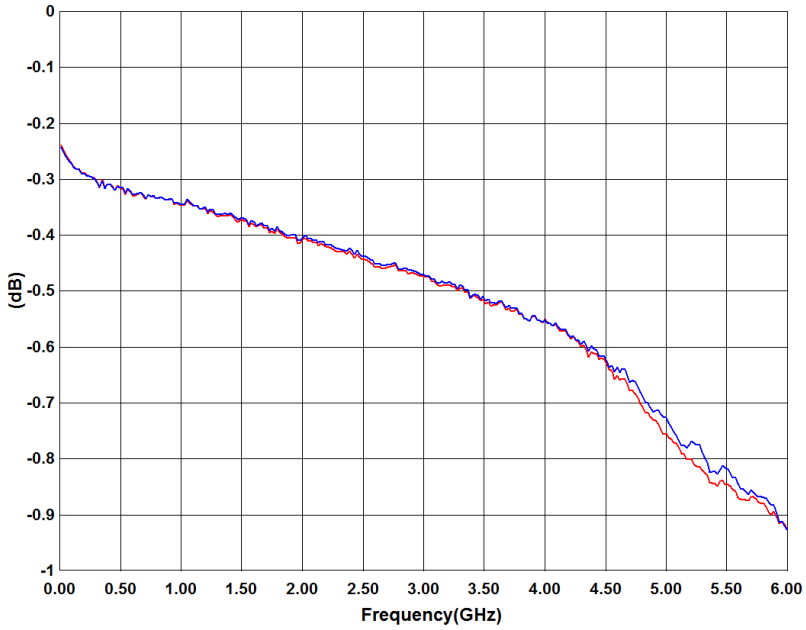

Insertion loss, RFC – RFx.

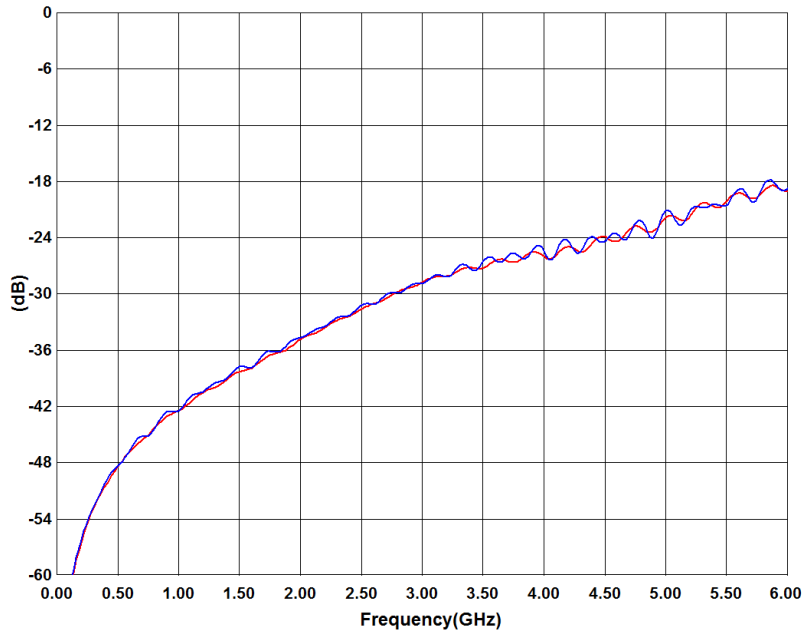

Isolation, RFC – RFx.

©2024-2026 TagoreTech Inc.

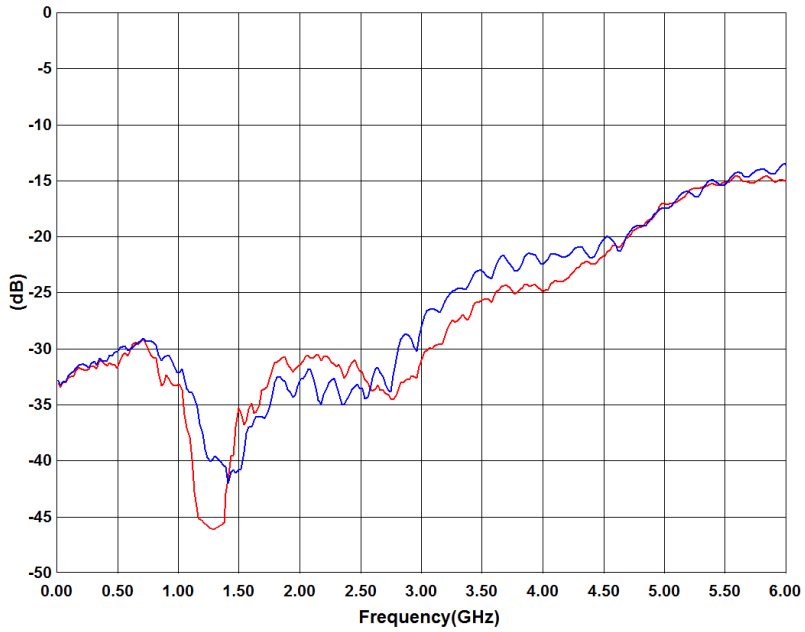

RF1, RF2 Return loss.

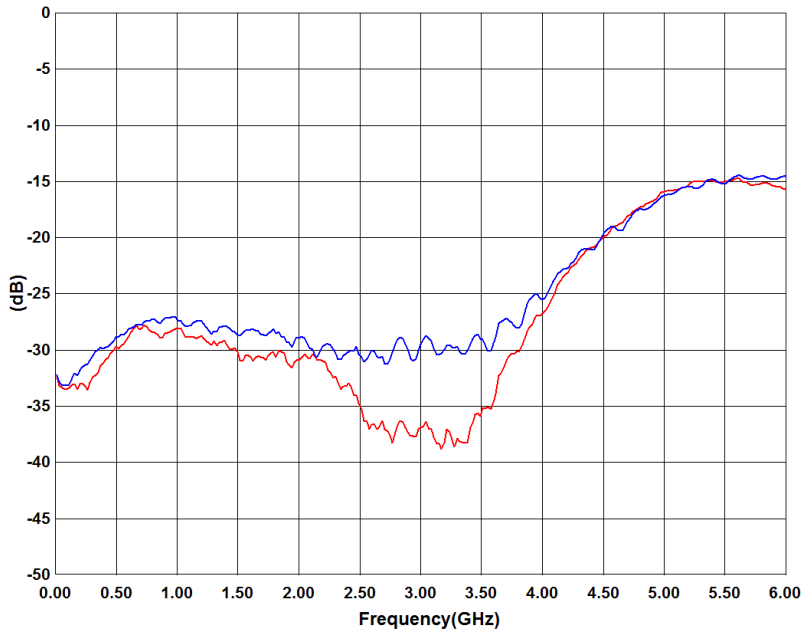

RFC (Antenna port) Return loss.

©2024-2026 TagoreTech Inc.

Device Package information

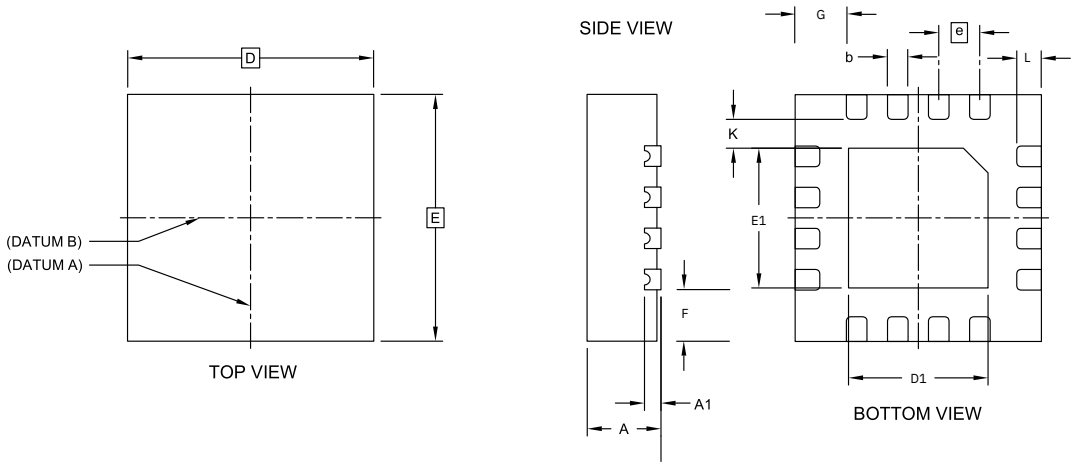

Figure 6: 16-pin QFN 3.0 x 3.0 x 0.75 mm^3 package drawing.

Please refer to application notes TN-001 PCB Design guideline and TN-002 Solder Rework at TagoreTech web page for PCB and soldering guidelines.

Table 9: Device Package Dimensions

Dimension	Value [mm]	Tolerance [mm]	Dimension	Value [mm]	Tolerance [mm]
A	0.75	±0.05	E	3.00 BSC	±0.05
A1	0.203	±0.02	E1	1.70	±0.05
b	0.25	+0.05/-0.07	F	0.625	±0.05
D	3.00 BSC	±0.05	G	0.625	±0.05
D1	1.70	±0.05	L	0.25	±0.05
e	0.50 BSC	±0.05	K	0.40	±0.05

Lead finish: Pure Sn without underlayer; thickness 7.5 μm – 20 μm (typical 10 – 12 μm).

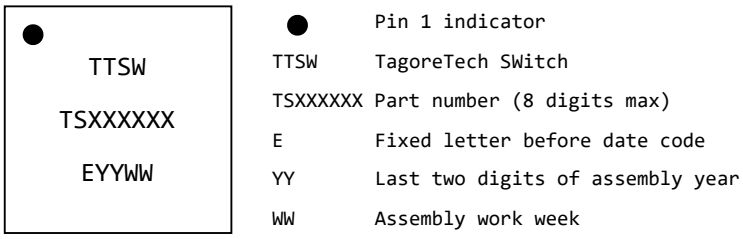

Figure 7: Part marking specification.

©2024-2026 TagoreTech Inc.

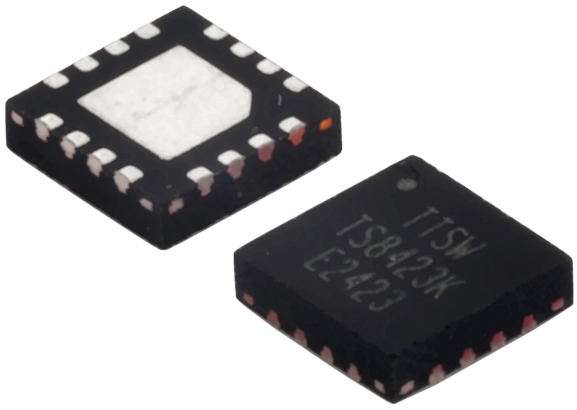

Figure 8: TS7321FK photo, top and bottom side.

©2024-2026 TagoreTech Inc.

PCB Land Design

Notes:

- 4-layer PCB is recommended.
- Via diameter is recommended to be 0.2mm to prevent solder wicking inside the vias.
- Thermal vias shall only be placed on the center pad.
- The maximum via number for the center pad is 3(X)×3(Y)=9.

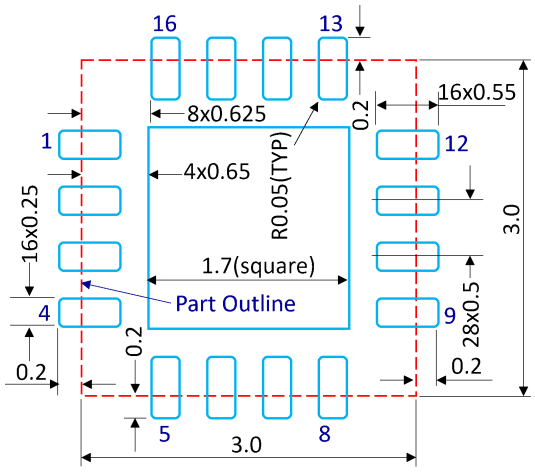

Figure 9: PCB land pattern, dimensions in [mm].

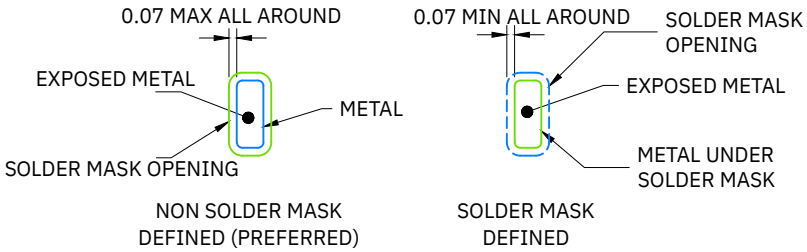

Figure 10: Solder mask opening, dimensions in [mm].

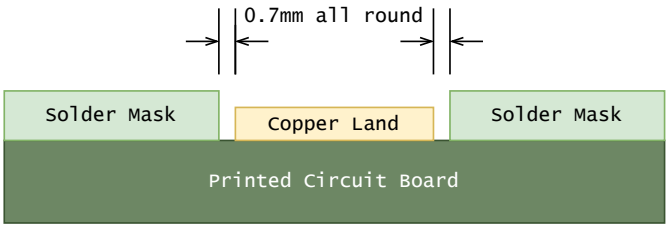

Figure 11: Preferred solder mask opening, side view, dimensions in [mm].

©2024-2026 TagoreTech Inc.

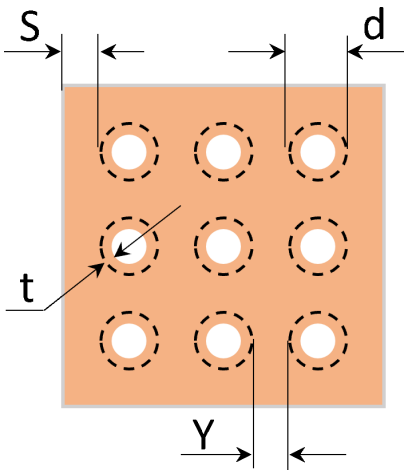

Figure 12: Thermal Via Pattern, Recommended Values: S≥0.15mm; Y≥0.20mm; d=0.2mm; Plating Thickness t=25μm or 50μm.

©2024-2026 TagoreTech Inc.

PCB Stencil Design

Notes:

- Laser-cut, stainless steel stencil is recommended with electro-polished trapezoidal walls to improve the paste release.
- Stencil thickness is recommended to be 125μm.

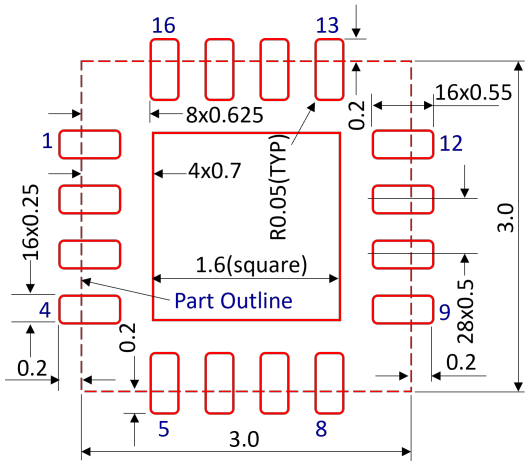

Figure 13: Stencil Openings, dimensions in [mm].

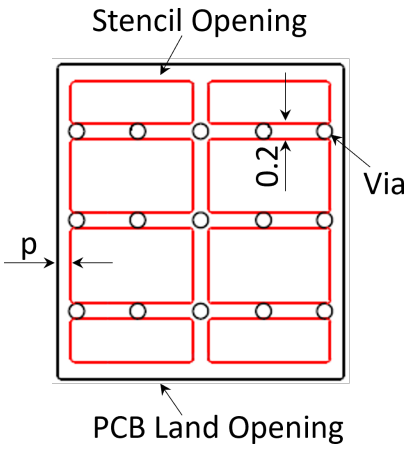

Figure 14: Stencil Openings Shall not Cover Via Areas If Possible, dimensions in [mm].

©2024-2026 TagoreTech Inc.

Tape and Reel Information

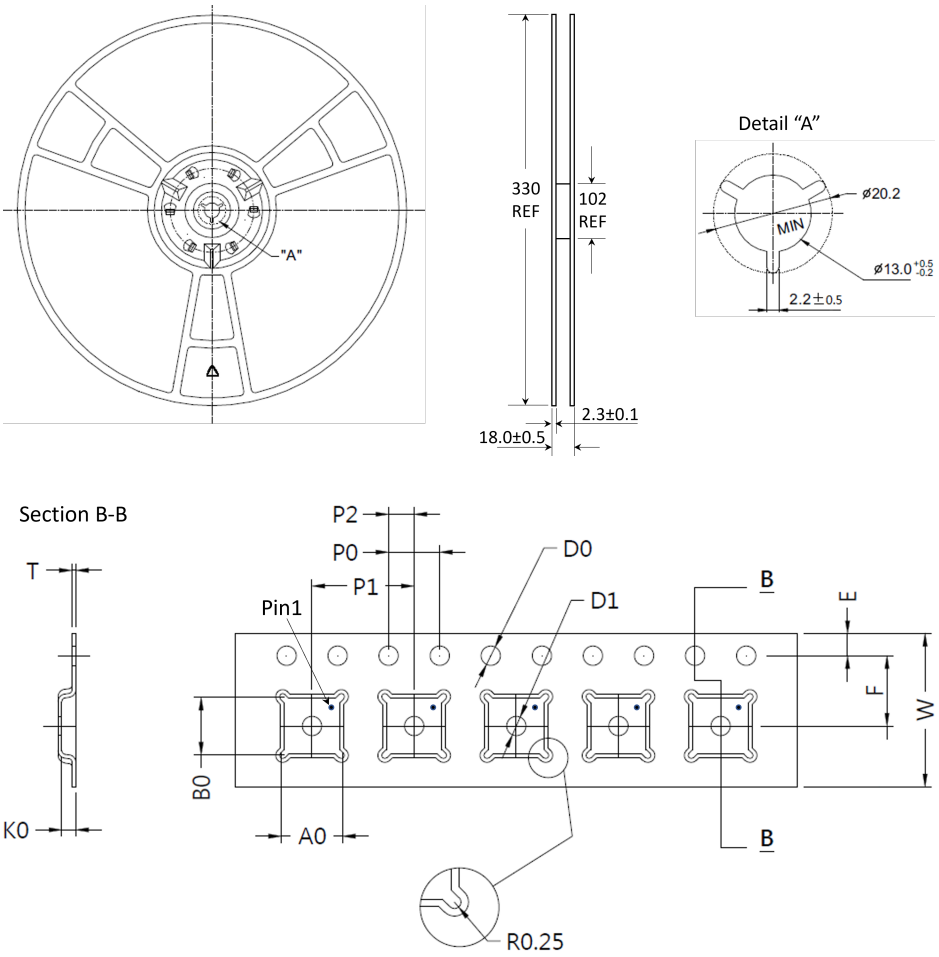

A0[mm]	B0[mm]	D0[mm]	D1[mm]	E[mm]	F[mm]	K0[mm]	P0[mm]	P1[mm]	P2[mm]	T[mm]	W[mm]
3.35	3.35	1.50	1.50	1.75	5.50	1.10	4.00	8.00	2.00	0.30	12.00

©2024-2026 TagoreTech Inc.

Glossary

IL	Insertion loss
ISO	Isolation
RL	Return loss
VSWR	Voltage Standing Wave Ratio
RFC	Antenna port or common port, referred as RFC
RFx	RF Port number x
NRND	Not recommended for new designs
QR	Quick response (code)

Changelog

Table 10: Changelog

Date	Revision	Notes
09/04/2024	2.0	TS7321FK datasheet, previous format.
09/21/2026	3.00	Datasheet converted to common TagoreTech datasheet template, package thickness corrected to 0.75mm, V_{CP} absolute maximum rating added, marked Not Recommended for New Designs.
11/08/2026	3.01	House style update: front-page notice box, replacement line and QR code to the TS8423K datasheet, TS7321FK functional diagram, TN-001/TN-002 links, distributor table with the DigiKey TS8423K link, QR code to the latest datasheet.

©2024-2026 TagoreTech Inc.

Legal Information

Published by

TagoreTech Inc.
601 Campus Drive, Suite B3
Arlington Heights, IL 60004, USA

©2024-2026 All Rights Reserved

TagoreTech is a fabless US semiconductor company specializing in GaN RF solutions: high-power RF switches in unique GaN-on-Si technology, RF power amplifiers in GaN-on-SiC, and reconfigurable front-end solutions — such as tunable power amplifiers and antenna tuning — that combine the two. TagoreTech serves defense, radar, datalink, 5G infrastructure, and public safety markets.

Legal Disclaimer

The information provided in this document is believed to be accurate and reliable, but shall in no event be regarded as a guarantee of conditions or characteristics. TagoreTech makes no warranties, express or implied, including without limitation any implied warranty of merchantability or fitness for a particular purpose. TagoreTech assumes no responsibility for the consequences of the use of this information, nor for any infringement of patents or other rights of third parties which may result from its use. No license is granted by implication or otherwise under any patent or patent rights of TagoreTech. Customers are responsible for validating the suitability of TagoreTech products in their own applications and for compliance with all applicable laws and regulations, including export control requirements. Specifications are subject to change without notice. Errors and omissions excepted.

Use in critical applications. TagoreTech products are not designed or authorized for use in life-support devices or systems, safety-critical applications, or applications where failure could reasonably be expected to cause personal injury, unless expressly agreed in writing by an authorized representative of TagoreTech. Any such use is at the customer's own risk.

Sales Contact

For further information on technology, delivery terms, conditions, and prices, please contact TagoreTech: support@tagoretech.com or contact our distributors or representatives as listed at TagoreTech website.
Please click the blue links.

Recommended replacement: TS8423K

The TS7321FK is not recommended for new designs. Please replace the TS7321FK with the TS8423K (1 MHz to 7.2 GHz, 20 W CW, 60 W peak, 3×3 mm QFN-16): TS8423K Product Page, TS8423K Datasheet

Buy TS7321FK and TS8423K directly

DigiKey
Digikey TS7321FK
Digikey TS7321FK-EVB
Digikey TS8423K

RichardsonRFPD An Arrow Company
RFPD TS7321FK

TS7321FK Product information

Please visit TS7321FK product page for further information TS7321FK Product Page

Latest version of TS7321FK datasheet is available for download: TS7321FK Datasheet

TagoreTech Inc. Product Brochure and datasheets

Tagore Product Brochure and links to all available datasheets is available for download:
TagoreTech Product Brochure

Scan for the latest datasheet