SP4T 30 W Broadband Power Switch 1 MHz to 2.7 GHz

Features

- Frequency Range 1 MHz to 2.7 GHz
- Low insertion loss:
  0.35 dB @ 400 MHz
  0.40 dB @ 800 MHz
  1.00 dB @ 2.5 GHz
- High isolation:
  43 dB @ 400 MHz
  36 dB @ 800 MHz
  23 dB @ 2.5 GHz
- 30 W CW Power
- Low power consumption, less than 1 mW
- No external DC blocking capacitors on RF lines
- All RF ports OFF state
- Versatile 2.6 V – 5.5 V power supply
- No need to supply negative voltages

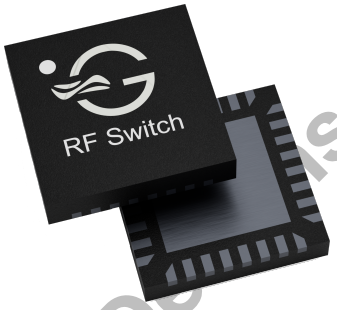

Figure 1: TS7441L in 4.0 x 4.0 mm^2 QFN 32-pin package.

Applications

- Private mobile and defense radios
- Public safety handsets
- Cellular infrastructure
- Satellite terminals
- Datalinks

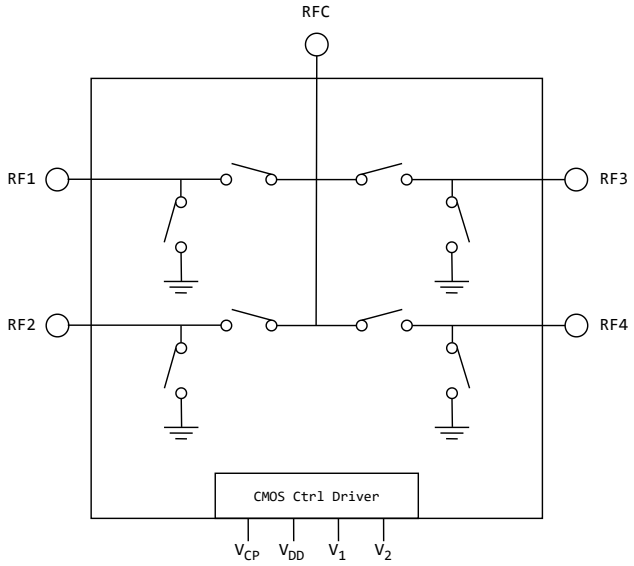

Figure 2: TS7441L functional diagram

General Description

The TS7441L is a symmetrical reflective Single Pole Four Throw (SP4T) switch designed for broadband, high-power switching applications. Its broadband behavior from 1 MHz to 2.7 GHz makes the TS7441L an excellent switch for all applications requiring low insertion loss, high isolation, and high linearity within a small package size. The TS7441L provides 30 W CW power handling.

The TS7441L is housed in a compact 4.0×4.0 mm^2 32-lead Quad Flat No-lead (QFN) plastic package.

RoHS

RoHS/REACH/Halogen free

Not recommended for New Designs

As replacement, please consider TagoreTech **TS8441L** (TS8441L datasheet).

Contents

Features 1
Applications 1
General Description 1
Ordering information 3
Pin Assignment 4
Absolute Maximum Ratings 5
Electrical Specifications 6
Switching time definition . . . 8
Switch Control table 9
Theory of Operation 10
Isolation modes . . . 10
Device powered off . . . 10
Feeding external V_{CP} voltage of -18 V . . . 10
Applications 10
Schematics and Evaluation Board 11
Performance, unmatched . . . 12
Performance at 2.5 GHz, matched . . . 14
Typical characteristics 15
Performance, unmatched . . . 15
Performance matched to 2.5 GHz, matching applied to EVK . . . 17
Device Package information 19
PCB Land Design 20
PCB Stencil Design 22
Tape and Reel Information 23
Glossary 24
Changelog . . . 24
Legal Information and Resources 25
Published by . . . 25
Legal Disclaimer . . . 25
Sales Contact . . . 25
Buy TS7441L directly from Distributors . . . 25
TS7441L Product Information . . . 25
TagoreTech Inc. Product Brochure and datasheets . . . 25

©2024-2026 TagoreTech Inc.

Ordering information

Table 1: Ordering Information

Device Part Number	Package Type	Notes
TS7441L	32 Pin 4.0x4.0x0.75 mm^3 QFN	Core part number
TS7441L-EVB	Evaluation Board	
TS7441LMTRPBF[1]	330 mm reel, 3 000 pcs	Full reel

[1] MTRPBF - M: Manufacturing, TR: Tape and Reel, and PBF: lead free.

Table 2: Tape and Reel Information

Form	Quantity	Reel Diameter	Reel Width
Tape and Reel	3 000	13” (330mm)	18mm

©2024-2026 TagoreTech Inc.

Pin Assignment

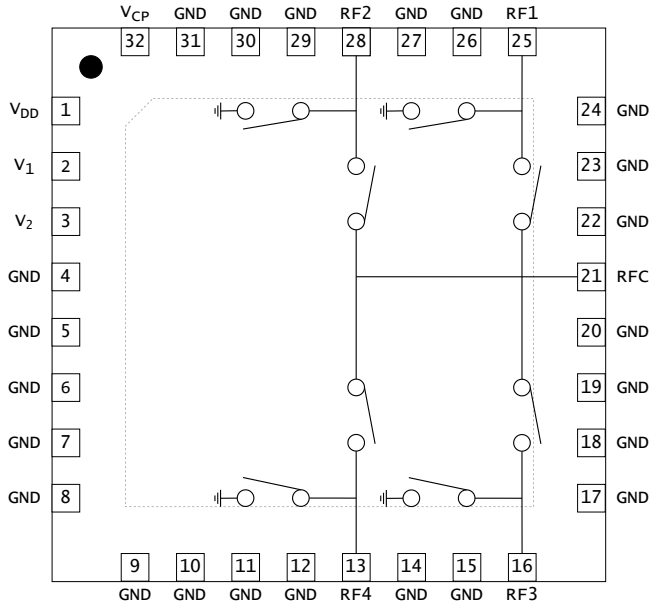

Figure 3: TS7441L pin assignment [top view]

Table 3: Pin Definition

Pin Number	Pin Name	Description
32	V_{CP}	Internal charge pump voltage output, connect a 1nF capacitor to GND on this node.
1	V_{DD}	DC Power Supply
2	V_1	Switch control input 1
3	V_2	Switch control input 2
13	RF4	RF port 4
16	RF3	RF port 3
21	RFC	RF Common port / Antenna port
25	RF1	RF port 1
28	RF2	RF port 2
4,5,6,7,8,9,10,11,12	GND	Connect to ground[2]
14,15,17,18,19,20		
22,23,24,26,27		
29,30,31		
33 [1]	GND	Ground thermal pad, please connect to GND

[1] The backside ground (thermal) pad of the package must be grounded directly to the ground plane of PCB with multiple vias, and adequate heat sinking must be used to ensure proper operation and thermal management.
[2] These pins are NC pins inside the package. To avoid floating pins around RF lines, we request these to be connected to ground.

©2024-2026 TagoreTech Inc.

Absolute Maximum Ratings

Table 4: Absolute Maximum Ratings $T_A = +25$°C unless otherwise specified[1].

Parameter	Symbol	Value	Unit
Electrical Ratings			
Power Supply Voltage	V_{DD}	2.6...5.5	V
Storage Temperature Range	T_{st}	−55 – 125	°C
Operating Temperature Range	T_{op}	−40 – 85	°C
Maximum Junction Temperature	T_j	+140	°C
Max RF CW input power, 450 MHz–1.5 GHz, T_{case}=+85°C	RFx/RFC	45	dBm
Max RF CW input power, 2.5 GHz (with match), T_{case}=+85°C	RFx/RFC	43.5	dBm
Max RF CW input power, <450 MHz	RFx/RFC	43.5	dBm
Thermal Ratings			
Thermal Resistance (junction-to-case) – Bottom side	$R_{\theta jc}$	15	°C/W
Thermal Resistance (junction-to-top)	$R_{\theta jt}$	≤37	°C/W
Soldering Temperature	T_{solder}	+260	°C
ESD Ratings			
Human Body Model (HBM)	Level 1B	500 – <1000	V
Charged Device Model (CDM)	Level C3	≥1000	V
Moisture Rating			
Moisture Sensitivity Level[2]	MSL	1	

[1] Maximum ratings are absolute ratings. Exposure to absolute maximum rating conditions for extended periods may affect device reliability and can cause permanent damage to the device. Exceeding one or a combination of the absolute maximum ratings may cause permanent and irreversible damage to the device and/or to surrounding circuit. Functional operation of the device is not implied in any conditions above those indicated in the Electrical Specifications section.

[2] Tagore recommends to store part in moisture barrier bags to preserve solderability.

©2024-2026 TagoreTech Inc.

Electrical Specifications

Table 5: Electrical Specifications $T_A = +25°C; V_{DD} = +2.7V; 50\Omega$ Source/Load.

Parameter	Condition	Minimum	Typical	Maximum	Unit
Operating frequency	f	1		2700	MHz
Insertion loss[2]	400 MHz		0.35		dB
unmatched	800 MHz		0.40	0.50	dB
$RFC - RFx$	1.95 GHz		0.70	0.80	dB
	2.5 GHz		1.00	1.10	dB
Insertion loss[1]	2.5 GHz		0.70		dB
matched					
Isolation	400 MHz		43		dB
unmatched	800 MHz	33	36		dB
$RFC - RFx$	1.95 GHz	23	26		dB
	2.5 GHz	21	23		dB
Isolation[1]	2.5 GHz		23		dB
matched					

[1] Matched values are not guaranteed as they include performance of matching components. These components are beyond control of TagoreTech and therefore given values are indications, not guaranteed values.
[2] Insertion loss increases by 0.1 dB at +85°C base plate temperature.

Table 6: Electrical Specifications $T_A = +25°C; V_{DD} = +2.7V; 50\Omega$ Source/Load.

Parameter	Condition	Minimum	Typical	Maximum	Unit
Operating frequency	f	1		2700	MHz
Return Loss	400 MHz		-28		dB
unmatched	800 MHz		-23		dB
$RFC - RFx$	1.95 GHz		-14		dB
	2.5 GHz		-11		dB
Return Loss[1]	2.5 GHz		-15		dB
matched					

[1] Matched values are not guaranteed as they include performance of matching components. These components are beyond control of TagoreTech and therefore given values are indications, not guaranteed values.

©2024-2026 TagoreTech Inc.

Table 7: Electrical Specifications $T_A = +25°C; V_{DD} = +2.7V; 50\Omega$ Source/Load.

Parameter	Condition	Minimum	Typical	Maximum	Unit
Operating frequency	f	1		2700	MHz
Harmonic Distortion					
H_2	800MHz, P_{in} =40dBm		-75		dBc
H_3	800MHz, P_{in} =40dBm		-80		dBc
IIP3	800MHz		70		dBm
Power and Compression point					
$P_{0.1dB}$[1]	450 MHz–2.5 GHz, CW		45		dBm
$P_{0.1dB}$[1]	20 MHz–450 MHz, CW		43		dBm
$P_{0.1dB}$[1]	<20 MHz, CW		42		dBm

[1] $P_{0.1\,dB}$ is a figure of merit. Please do not exceed Absolute Maximum ratings.
[2] No external DC blocking capacitors required on RF pins unless DC voltage is applied on a RF pin.

Table 8: Electrical Specifications $T_A = +25°C; V_{DD} = +2.7V; 50\Omega$ Source/Load.

Parameter	Condition	Minimum	Typical	Maximum	Unit
Operating frequency	f	1		2700	MHz
Switching Time					
t_{SW}[2]	Switching time, C_{VCP} = 1nF		2.0		μs
Power Supply, DC					
Control voltage[3]	Power Supply V_{DD}	2.6	3.3	5.5	V
	All control pins high, V_{ih}	1.0	3.3	5.25	V
	All control pins low, V_{il}	-0.3	0	0.5	V
Control current	All control pins high, I_{ih}			7.5	μA
	All control pins low, I_{il}		0		μA
Current consumption	I_{DD}, active mode (V_{DD} on)		160	200	μA

[2] Switching time defined from 50 % point of control signal to the point where 10 %/90 % of the RF value is settled. C_{VCP} = 1nF connected to ground on V_{CP} pin.
[3] Control voltage V_{ih} cannot be higher than V_{DD} (to avoid forward biasing of ESD diode)

©2024-2026 TagoreTech Inc.

Switching time definition

Example of the definition by using 10 W/40 dBm signal. We apply 10W signal to RF port, stabilized with isolator. Isolator is needed as our switch shows to RF port approximately 4Ω impedance. Let's assume that the switch insertion loss is 0.3 dB. Therefore 90% of the RF signal is 39.55 dBm and 10% of the RF signal is 1W/30dBm. We need to take into account 0.3dB insertion loss, therefore numbers are 39.25 dBm and 29.7 dBm respectively. We change the control from low to high and our time reference point is when our control signal exceeds lower threshold value V_{ihlow}. In certain measurements when control signal rise time is significantly shorter than RF output signal, we approximate start of the clock with 50% point of control signal.

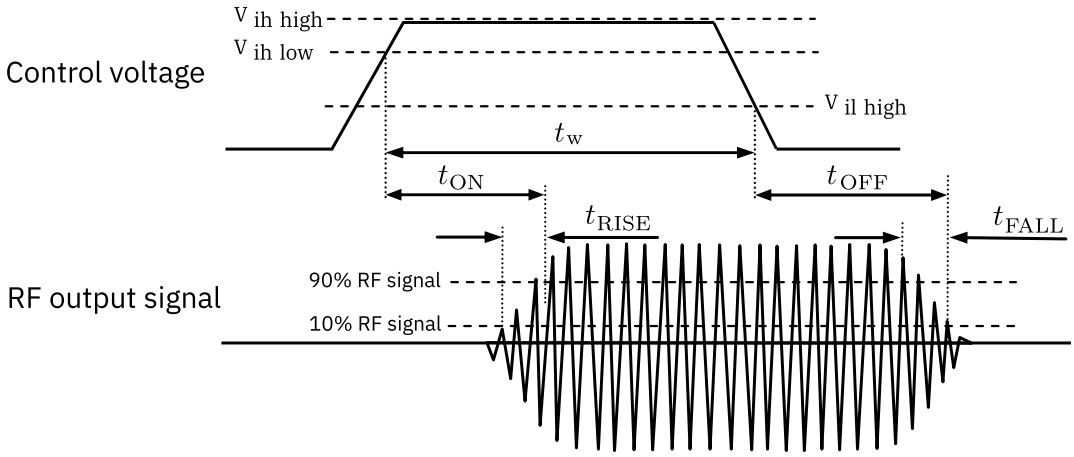

Figure 4: Switching time definition, t_{ON}, t_{OFF}, t_{RISE}, t_{FALL}. Minimum pulse width t_w.

Our component uses integrated charge pump. Maximum pulse repetition rate defines what is maximum frequency for switching events. Please do not exceed given maximum frequency. By feeding external -18 V to V_{CP}, one can improve maximum pulse repetition rate f_{PRR}. Feeding external -18V to V_{CP}, one can drive switch at least to 20kHz f_{PRR}. Expect current consumption of 10mA of -18V.

©2024-2026 TagoreTech Inc.

Switch Control table

Table 9: Switch Control Table

V_{DD}[1]	V_2	V_1	**Switch state**
1	0	0	RFC – RF1 ON[2]
1	0	1	RFC – RF2 ON
1	1	0	RFC – RF3 ON
1	1	1	RFC – RF4 ON
0	0	0	V_{DD} off (Isolation), all FETs are on, short shown to RFC and RFx ports

[1] V_{DD} should be applied first before V_1 and V_2, otherwise may cause damage to the device.
[2] There are internal pull-downs to ground on both V_1 and V_2 control pins, the state at start-up without any control voltage applied will be RFC – RF1 ON.

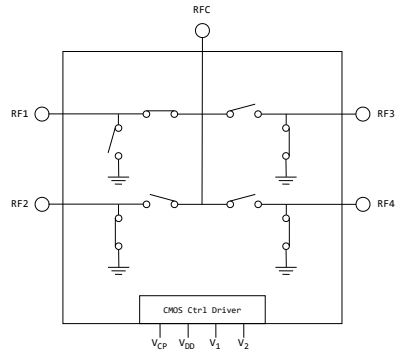

RFC-RF1 ON

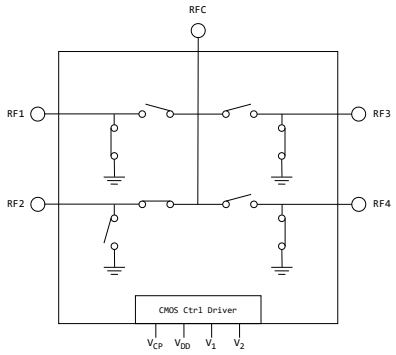

RFC-RF2 ON

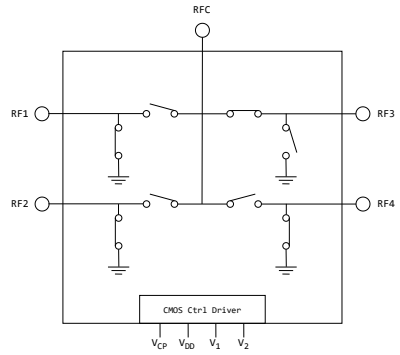

RFC-RF3 ON

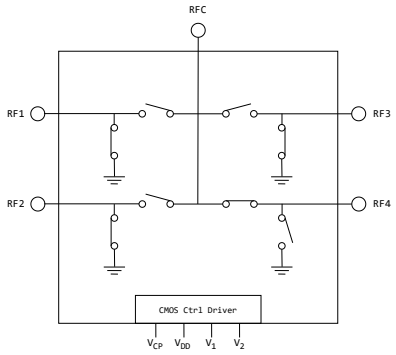

RFC-RF4 ON

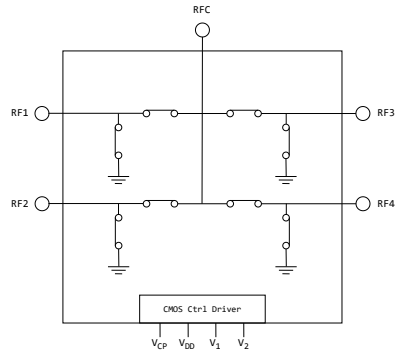

V_{DD} off state

©2024-2026 TagoreTech Inc.

Theory of Operation

Isolation modes

TS7441L has isolation mode when V_{DD} is turned off.

Device powered off

When V_{DD} is 0 V, all switch RF transistors are on, ie. every MOSFET is on. This means that series MOSFETs and shunt MOSFETs are conducting. Every RF port is essentially connected to ground, including RFC port. This is practical when device is directly connected to RFC, there is certain protection against induced electrical fields. This can partially protect radio equipment against electrical fields, when device is not in usage.

Feeding external V_{CP} voltage of -18 V

TS7441L supports external voltage supply to V_{CP} to increase pulse repetition rate f_{PRR}. With external voltage supply, f_{PRR} can be increased at least to support pulse repetition rate more than 20 kHz, in some cases even up to 100 kHz. In order to use external voltage, it is mandatory to supply first V_{DD}, have a delay of 1 ms and then apply -18 V to V_{CP}. Shutdown should be in opposite order.

Applications

TS7441L is offering 30 W capability from 1 MHz to 2700 MHz frequency band. Applications include narrowband and multi-octave wideband radios, jammers, EMC testing, public mobile radios, industrial and scientific applications. In the past, such applications were covered with power hungry and complex PIN diodes, TS7441L significantly reduces design complexity for such RF switching needs. TS7441L works well without external matching components; for operation at 2.5 GHz, matching is recommended to improve performance. Datasheet provides an example matching and its performance.

©2024-2026 TagoreTech Inc.

Schematics and Evaluation Board

S-parameters of the both presented EVBs can be downloaded from link: Download TS7441L S-parameters

Table 10: Port definitions in s-parameter files and plots.

PIN name	Port numbers	S-parameters	Function
RFC	1	S11	
RF1	2	S22	
RF2	3	S33	
RF3	4	S44	
RF4	5	S55	
RF1ON	12	S21	RFC-RF1 ON
RF2ON	13	S31	RFC-RF2 ON
RF3ON	14	S41	RFC-RF3 ON
RF4ON	15	S51	RFC-RF4 ON

©2024-2026 TagoreTech Inc.

Performance, unmatched

TS7441L operates without any matching components across the band. Only two external components are recommended, 1 nF for V_{CP} and 10 nF for V_{DD} lines for supporting charge pump and power supply.

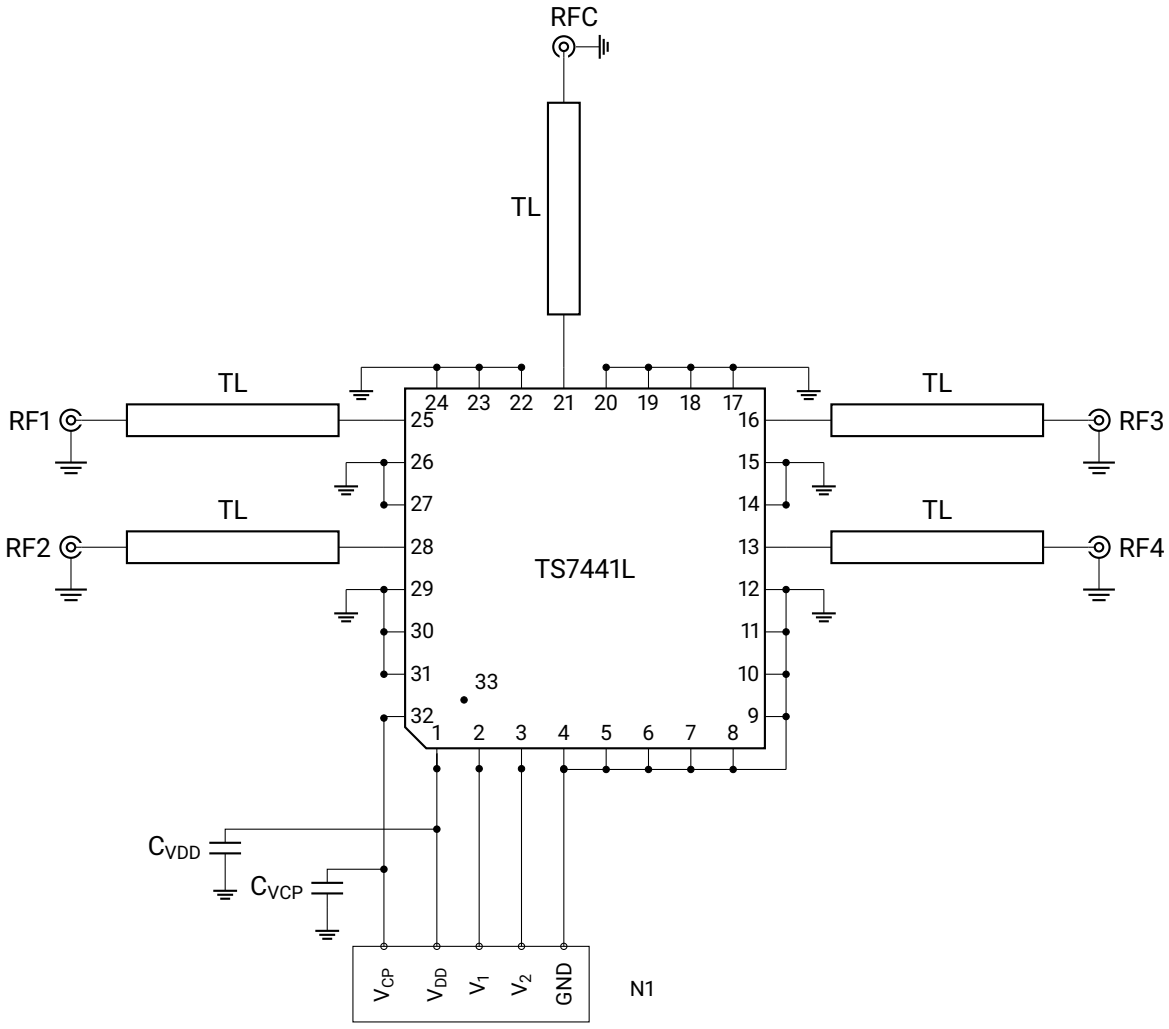

Schematics of TS7441L EVB

Table 11: Components used for TS7441L EVB

Reference	Part number / Value	Description	Notes
C_{VDD}	10 nF	Capacitor	
C_{VCP}	1 nF	Capacitor	

©2024-2026 TagoreTech Inc.

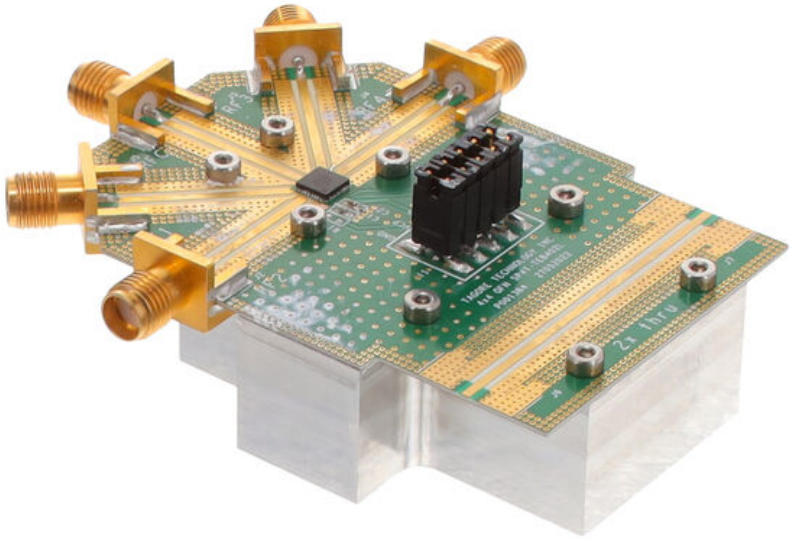

Photo of TS7441L EVB without matching components.

©2024-2026 TagoreTech Inc.

Performance at 2.5 GHz, matched

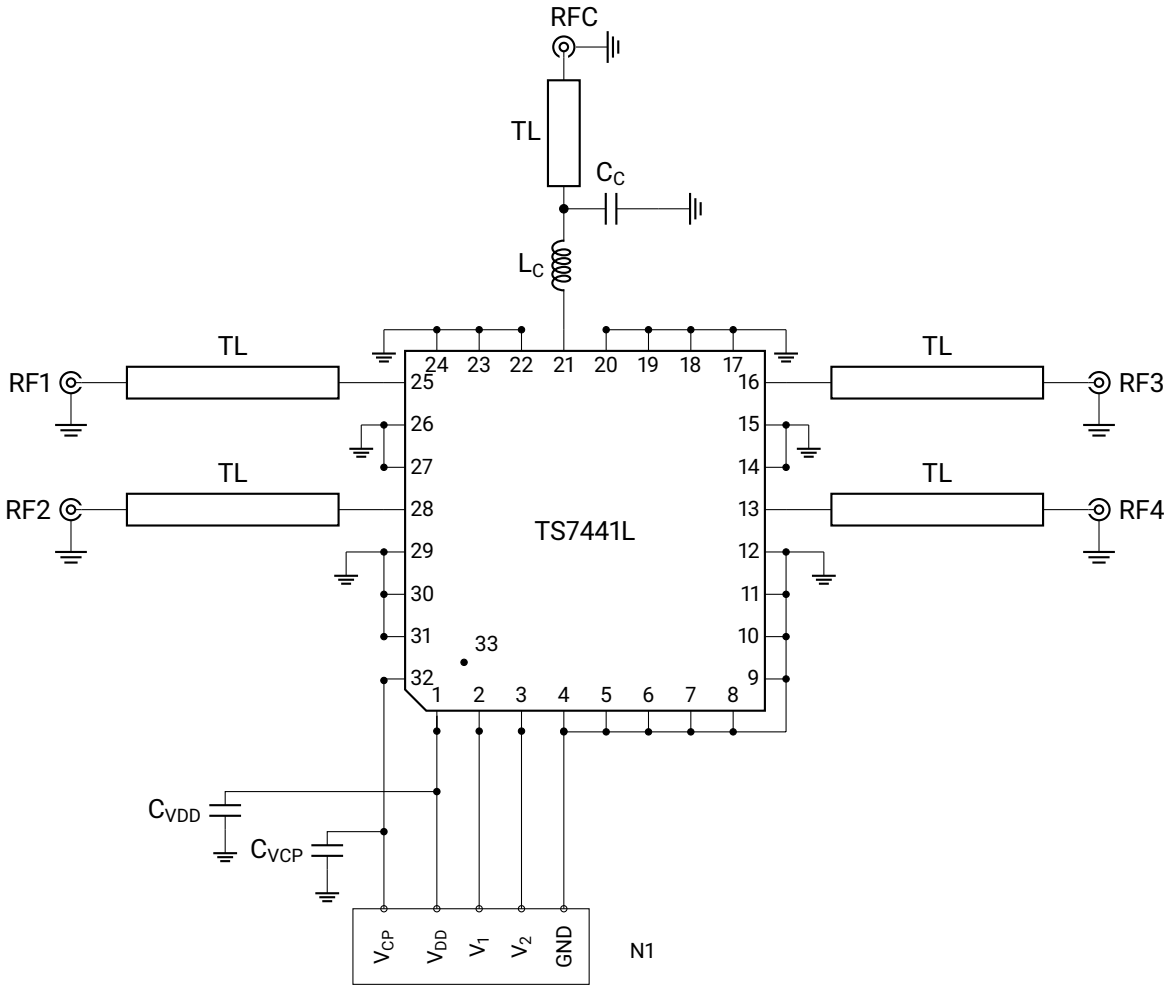

Table 12: Matching components used for 2.5 GHz matching

Reference	Part number / Value	Description	Notes
L_C	0603HC-1N6XJEW	Ceramic core chip inductor, Coilcraft	1.6 nH, ±5 %
C_C	0402N0R5AW251	Ceramic capacitor, Passive Plus Inc	0.5 pF, 250 V, ± 0.1 pF
C_{VDD}	10 nF	Capacitor	
C_{VCP}	1 nF	Capacitor	

©2024-2026 TagoreTech Inc.

Typical characteristics

Performance, unmatched

These measurements have been taken from TS7441L EVK, CPW losses have been de-embedded from the measurements. Device does not require any matching components for operation across the band. At 2.5 GHz, performance can be improved by adding matching to the ports. Our matching example shows the achievable improvement at 2.5 GHz.

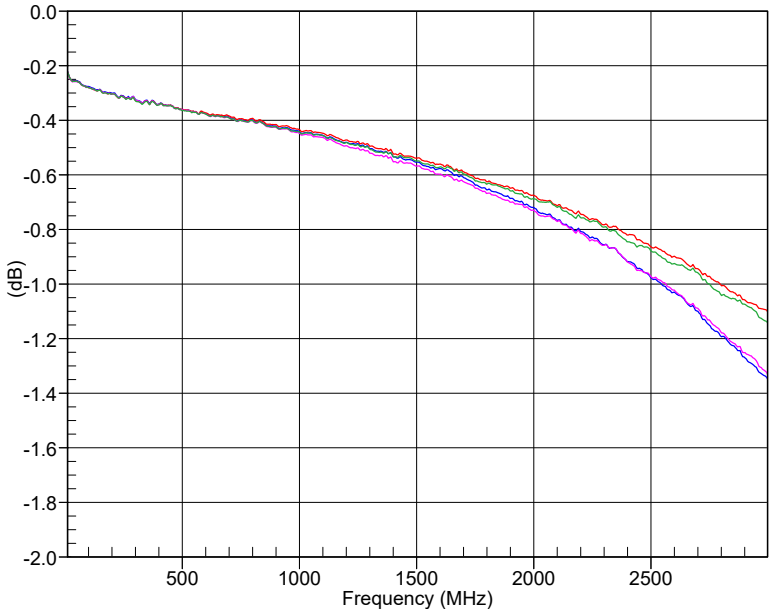

Insertion loss, RFC – RFx.

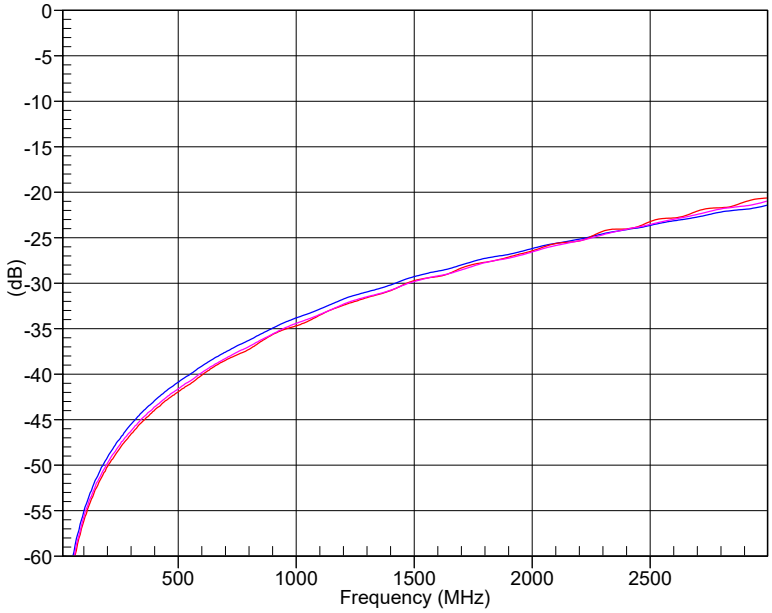

Isolation between RFC to non-active RFx.

©2024-2026 TagoreTech Inc.

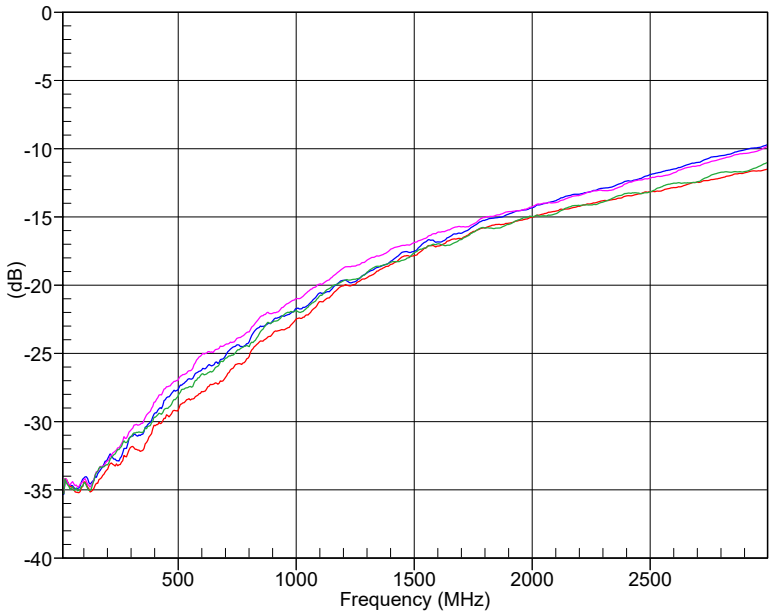

RFx port Return Loss.

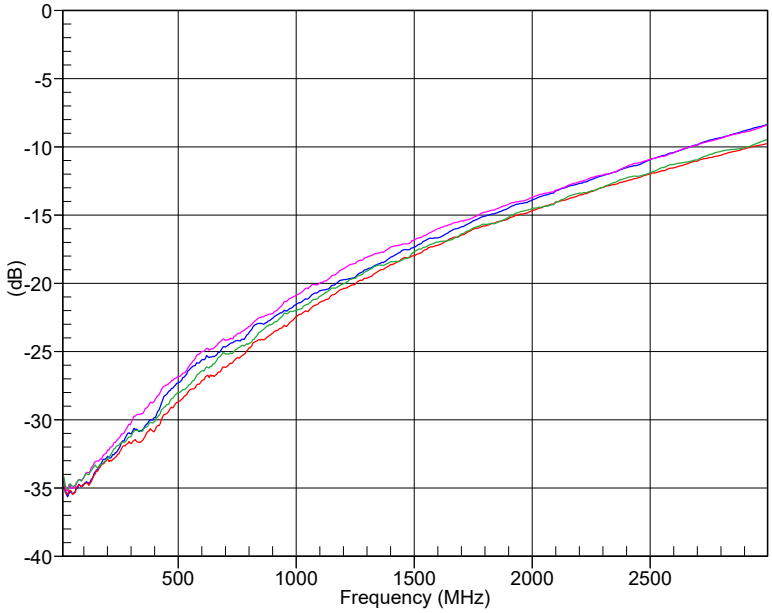

RFC port Return Loss.

©2024-2026 TagoreTech Inc.

Performance matched to 2.5 GHz, matching applied to EVK

These measurements have been taken from TS7441L EVK, matching components applied. CPW losses have been de-embedded from the measurements, but matching component losses are present.

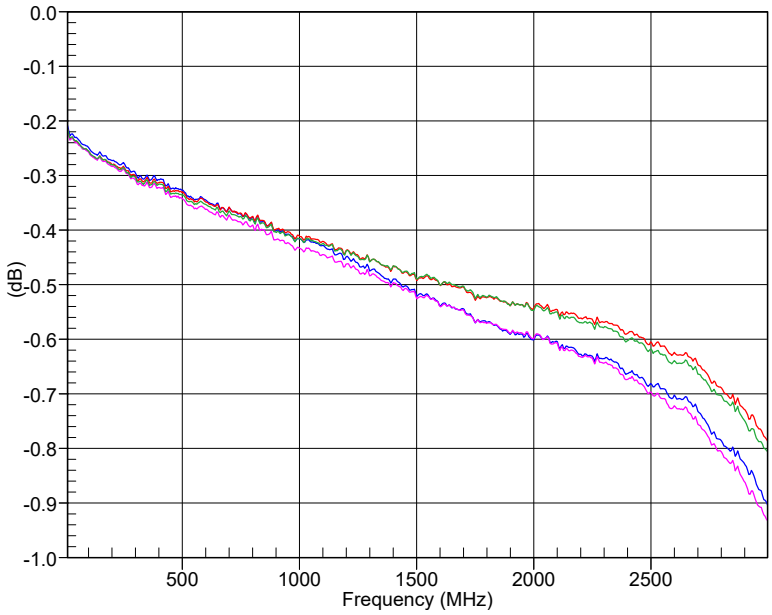

Insertion loss, RFC – RFx.

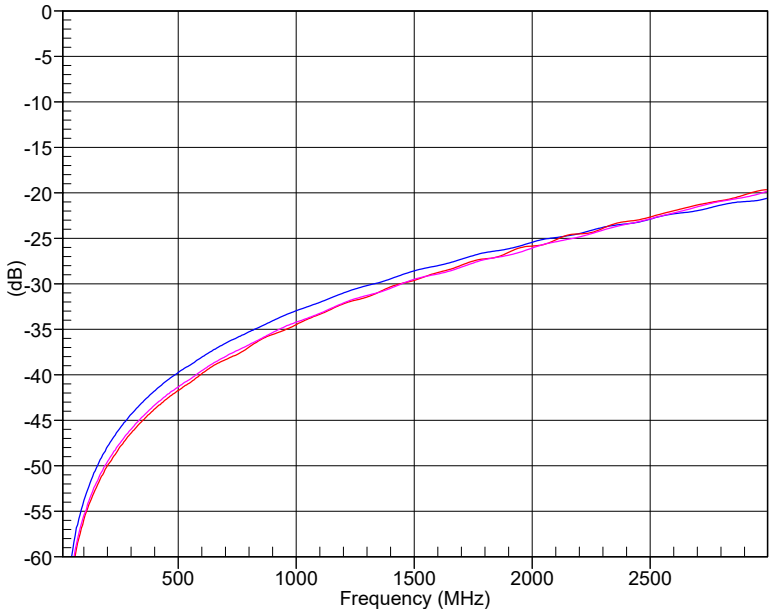

Isolation between RFC to non-active RFx.

©2024-2026 TagoreTech Inc.

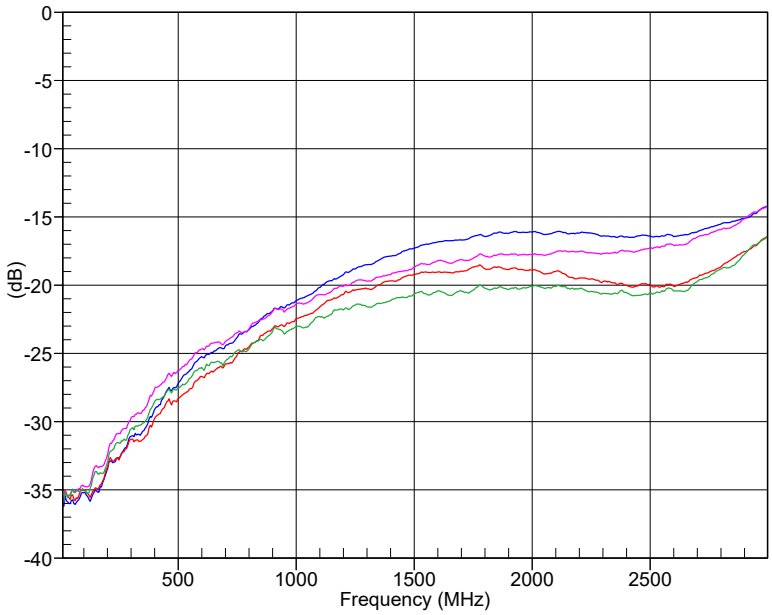

RFx port Return Loss.

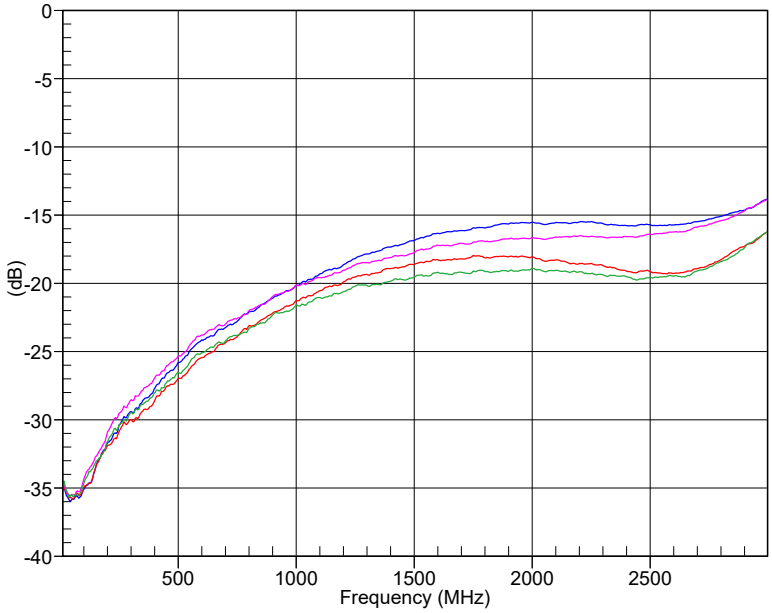

RFC port Return Loss.

©2024-2026 TagoreTech Inc.

Device Package information

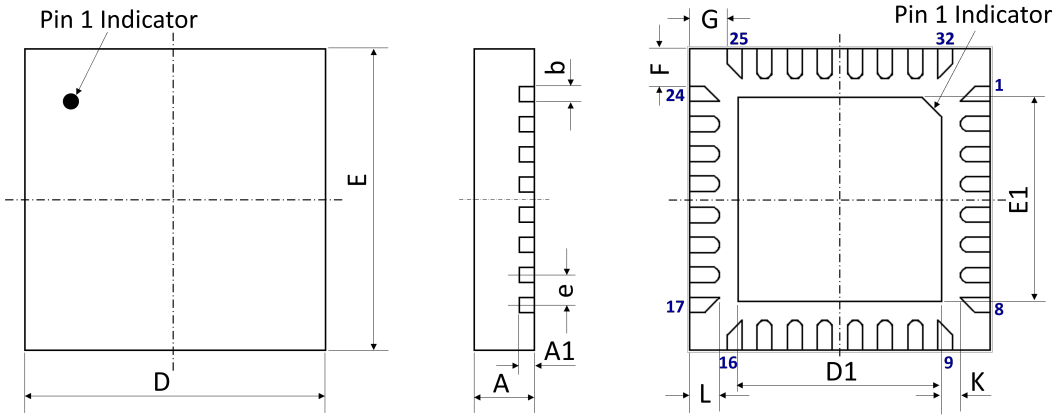

Figure 6: 32-pin QFN 4.0 x 4.0 x 0.75 mm^3 package drawing.

Please refer to application notes TN-001 and TN-002 at TagoreTech web page for PCB and soldering guidelines.

Table 13: Device Package Dimensions

Dimension	Value [mm]	Tolerance [mm]	Dimension	Value [mm]	Tolerance [mm]
A	0.75	±0.05	E	4.00 BSC	±0.05
A1	0.203	±0.02	E1	2.70	±0.05
b	0.20	+0.05/-0.07	F	0.50	±0.05
D	4.00 BSC	±0.05	G	0.50	±0.05
D1	2.70	±0.05	L	0.40	±0.05
e	0.40 BSC	±0.05	K	0.25	±0.05

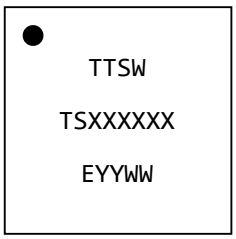

●	Pin 1 indicator
TTSW	TagoreTech SWitch
TSXXXXXX	Part number (8 digits max)
E	Fixed letter before date code
YY	Last two digits of assembly year
WW	Assembly work week

Figure 7: Part marking specification.

©2024-2026 TagoreTech Inc.

PCB Land Design

Notes:

- 4-layer PCB is recommended.
- Via diameter is recommended to be 0.3mm to prevent solder wicking inside the vias.
- Thermal vias shall only be placed on the center pad.
- The maximum via number for the center pad is 11(X)×11(Y)=121.

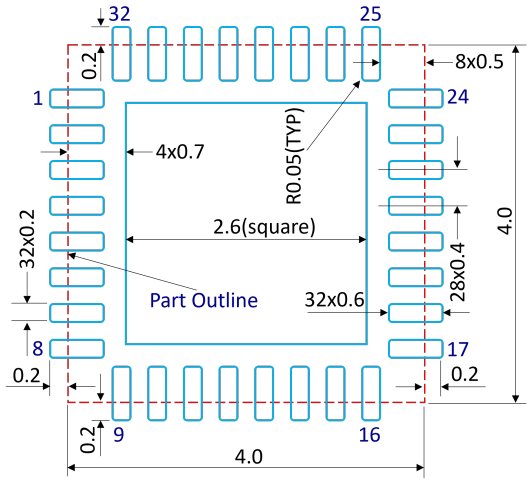

Figure 8: PCB land pattern, dimensions in [mm].

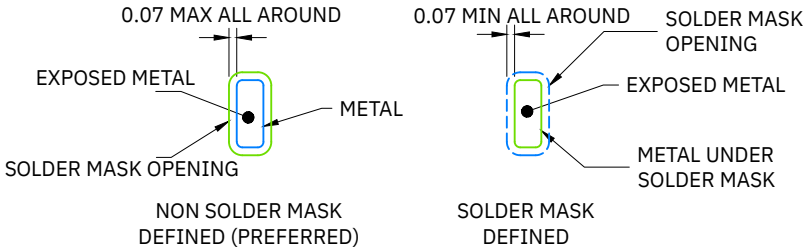

Figure 9: Solder mask opening, dimensions in [mm].

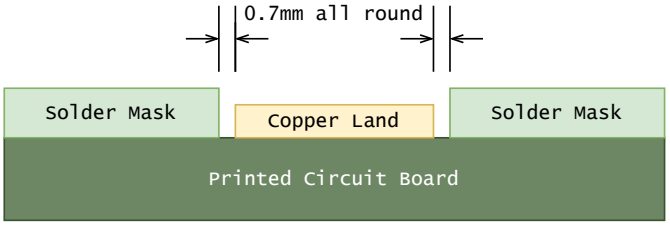

Figure 10: Preferred solder mask opening, side view, dimensions in [mm].

©2024-2026 TagoreTech Inc.

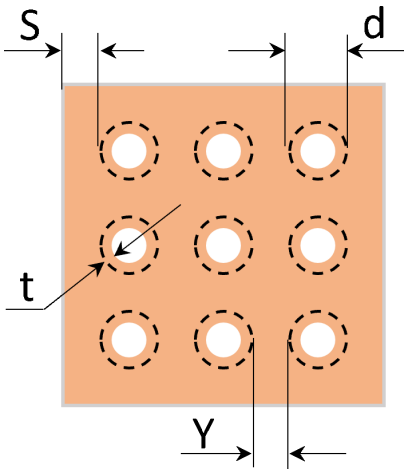

Figure 11: Thermal Via Pattern, Recommended Values: S≥0.15 mm; Y≥0.20 mm; d=0.2 mm; Plating Thickness t=25μm or 50μm.

©2024-2026 TagoreTech Inc.

PCB Stencil Design

Notes:

- Laser-cut, stainless steel stencil is recommended with electro-polished trapezoidal walls to improve the paste release.
- Stencil thickness is recommended to be 125 μm.

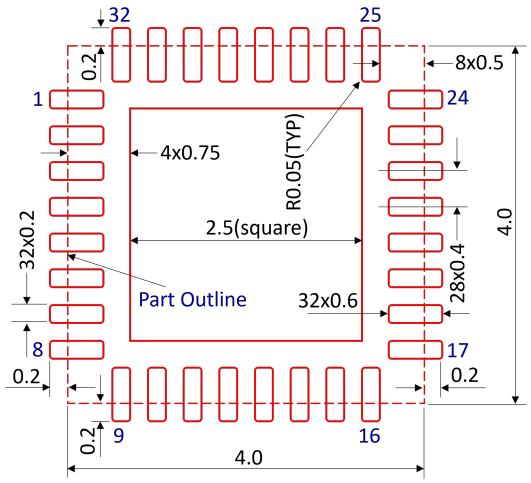

Figure 12: Stencil Openings, dimensions in [mm].

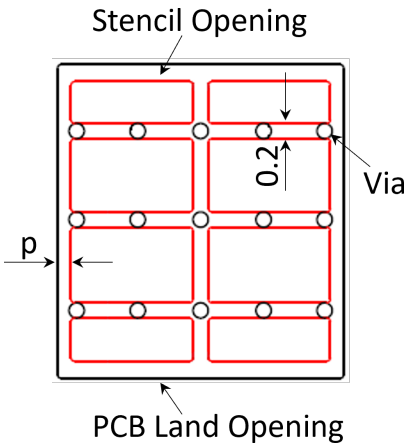

Figure 13: Stencil Openings Shall not Cover Via Areas If Possible, dimensions in [mm].

©2024-2026 TagoreTech Inc.

Tape and Reel Information

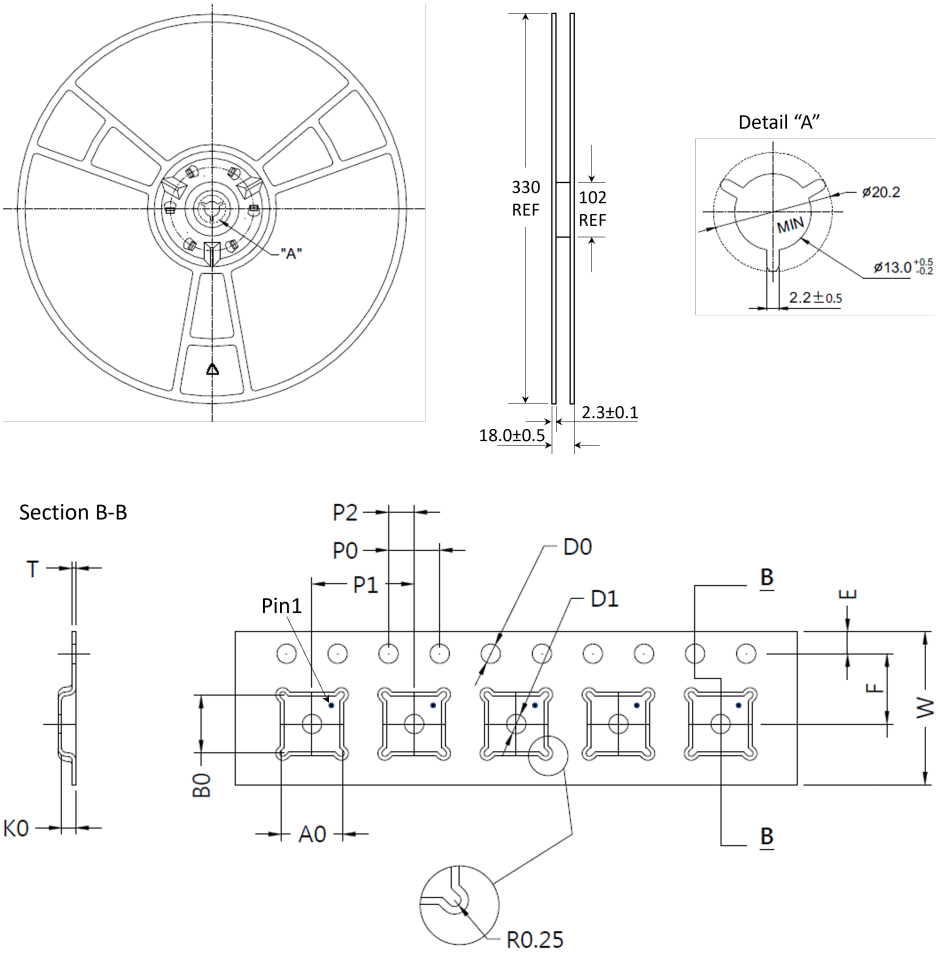

A0[mm]	B0[mm]	D0[mm]	D1[mm]	E[mm]	F[mm]	K0[mm]	P0[mm]	P1[mm]	P2[mm]	T[mm]	W[mm]
4.35	4.35	1.50	1.50	1.75	5.50	1.10	4.00	8.00	2.00	0.30	12.00

©2024-2026 TagoreTech Inc.

Glossary

IL	Insertion loss
ISO	Isolation
RL	Return loss
VSWR	Voltage Standing Wave Ratio
RFC	RF Common port, sometimes referred as ANT
RFx	RF Port number x
Unitarity	Describes power absorption of the component, $1 - \|S_{11}\|^2 - \|S_{21}\|^2 - \|S_{31}\|^2 - \|S_{41}\|^2 - \|S_{51}\|^2$

Changelog

Table 14: Changelog

Date	Revision	Notes
11/25/2019	2.1	TS7441L datasheet, Word document format
09/20/2026	3.00	Migrated to new datasheet format. Electrical specifications and absolute maximum ratings updated.

©2024-2026 TagoreTech Inc.

Legal Information and Resources

Published by

TagoreTech Inc.
601 Campus Drive, Suite B3
Arlington Heights, IL 60004, USA

©2024-2026 All Rights Reserved

TagoreTech is a fabless US semiconductor company specializing in GaN RF solutions: high-power RF switches in unique GaN-on-Si technology, RF power amplifiers in GaN-on-SiC, and reconfigurable front-end solutions — such as tunable power amplifiers and antenna tuning — that combine the two. TagoreTech serves defense, radar, datalink, 5G infrastructure, and public safety markets.

Legal Disclaimer

The information provided in this document is believed to be accurate and reliable, but shall in no event be regarded as a guarantee of conditions or characteristics. TagoreTech makes no warranties, express or implied, including without limitation any implied warranty of merchantability or fitness for a particular purpose. TagoreTech assumes no responsibility for the consequences of the use of this information, nor for any infringement of patents or other rights of third parties which may result from its use. No license is granted by implication or otherwise under any patent or patent rights of TagoreTech. Customers are responsible for validating the suitability of TagoreTech products in their own applications and for compliance with all applicable laws and regulations, including export control requirements. Specifications are subject to change without notice. Errors and omissions excepted.

Use in critical applications. TagoreTech products are not designed or authorized for use in life-support devices or systems, safety-critical applications, or applications where failure could reasonably be expected to cause personal injury, unless expressly agreed in writing by an authorized representative of TagoreTech. Any such use is at the customer's own risk.

Sales Contact

For further information on technology, delivery terms, conditions, and prices, please contact TagoreTech: support@tagoretech.com or contact our distributors or representatives as listed at TagoreTech website. Please click the blue links.

Buy TS7441L directly from Distributors

DigiKey	Digikey TS7441L Digikey TS7441L-EVB
RichardsonRFPD An Arrow Company	RFPD TS7441L

TS7441L Product Information

Please visit TS7441L product page for further information TS7441L Product Page

Latest version of TS7441L datasheet is available for download: TS7441L Datasheet

S-parameters of the both presented EVBs are available: TS7441L S-parameters

TagoreTech Inc. Product Brochure and datasheets

Tagore Product Brochure and links to all available datasheets is available for download

TagoreTech Product Brochure