SPDT 316 W_{peak} T/R Switch 0.7 GHz to 4.0 GHz

Not recommended for new designs. This datasheet is provided for archiving purposes. For new designs, please consider the TS8029N: TS8029N product page, TS8029N datasheet.

Features

- Low insertion loss (TX path): 0.65 dB @ 2.7 GHz
- High isolation (RX path): 45 dB @ 2.7 GHz
- 316 W peak power handling
- No external DC blocking capacitors on RF line
- Versatile 2.6 V – 5.25 V power supply

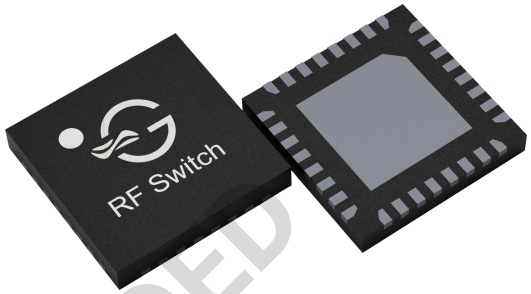

Figure 1: TS7529N in 5.0 x 5.0 mm^2 QFN 32-pin package.

Applications

- Cellular infrastructure
- Small cells
- LTE relays and microcells
- Satellite terminals

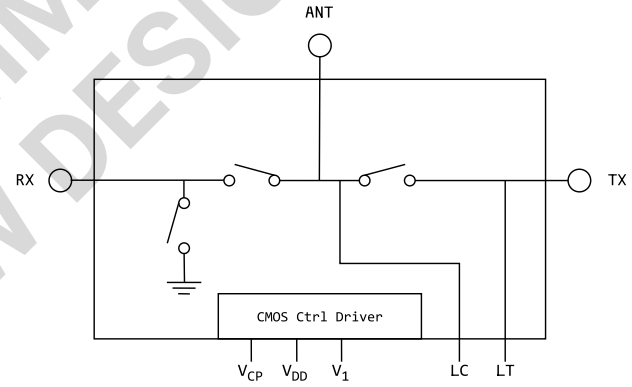

Figure 2: TS7529N functional block diagram (top view)

General Description

The TS7529N is an asymmetrical reflective Single Pole Double Throw (SPDT) switch designed for broadband, high peak power switching applications. Its broadband behavior from 700 MHz to 4 GHz makes the TS7529N an excellent switch for all the applications requiring low insertion loss, high isolation and high linearity within a small package size.

The TS7529N is packaged into a compact Quad Flat No-lead (QFN) $5 \times 5\,mm^2$, 32-lead plastic package.

The TS7529N is not recommended for new designs; please consider the TS8029N.

RoHS10/REACH/Halogen free

NOT RECOMMENDED FOR NEW DESIGNS

Contents

Features 1
Applications 1
General Description 1
Ordering information 3
Pin Assignment 4
Absolute Maximum Ratings 5
Electrical Specifications 6
Switching time definition . . . 8
Switch Control table 9
Theory of Operation 10
Asymmetrical switch topology . . . 10
Tuning inductor and tuning elements . . . 10
Application Information 10
Schematics and Evaluation Board 11
Typical characteristics 12
Typical characteristics, tuned for 2.5 to 2.7 GHz . . . 12
Device Package information 13
Glossary 14
Changelog . . . 14
Legal Information 15
Published by . . . 15
Legal Disclaimer . . . 15
Sales Contact . . . 15
Recommended for new designs: TS8029N . . . 15
TS7529N Product Information . . . 15
TagoreTech Inc. Product Brochure and datasheets . . . 15

NOT RECOMMENDED FOR NEW DESIGNS

©2024-2026 TagoreTech Inc.

Ordering information

Table 1: Ordering Information

Device Part Number	Package Type	Notes
TS7529N	QFN 5x5 mm	Core part number, not recommended for new designs
TS7529NMTRPBF[1]	330 mm reel, 1000 pcs	Full reel

[1] MTRPBF - M: Manufacturing, TR: Tape and Reel, and PBF: lead free.
The TS7529N is not recommended for new designs; please consider the TS8029N.

Table 2: Tape and Reel Information

Form	Quantity	Reel Diameter	Reel Width
Tape and Reel	1000	–	–

NOT RECOMMENDED FOR NEW DESIGNS

©2024-2026 TagoreTech Inc.

Pin Assignment

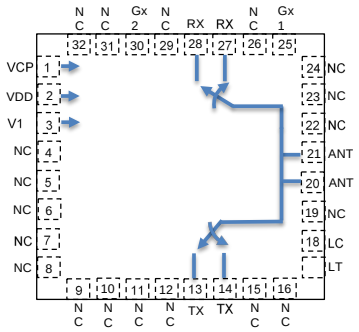

Figure 3: TS7529N pin assignment [top view]

Table 3: Pin Definition

Pin Number	Pin Name	Description
1	V_{CP}	Connecting a 1 nF capacitor to ground enables faster switching time
2	V_{DD}	DC power supply
3	V_1	Switch control input
13, 14	TX	TX path
17, 18	LT, LC	Tuning inductor for high frequency band
25, 30	Gx1, Gx2	Optional: tuning to improve RX isolation
20, 21	ANT	Antenna port
27, 28	RX	RX port
4–12, 15, 16, 19, 22–24, 26, 29, 31, 32	NC	No connect. Can be grounded for improved thermals
33 [1]	GND	Ground slug

[1] The backside ground slug of the package must be grounded directly to the ground plane with multiple vias to ensure proper operation and thermal management.

NOT RECOMMENDED FOR NEW DESIGNS

©2024-2026 TagoreTech Inc.

Absolute Maximum Ratings

Table 4: Absolute Maximum Ratings[1].

Parameter	Symbol	Value	Unit
Power Supply Voltage	V_{DD}	2.6 – 5.5	V
Storage Temperature Range	T_{st}	−55 – 125	°C
Operating Temperature Range	T_{op}	−40 – 105	°C
RF input power CW, $+85$°C base plate	TX / ANT	40	W

[1] Exceeding one or a combination of the Absolute Maximum Ratings conditions may cause permanent damage to the device.

Table 5: Qualification Information

Parameter	Condition	Value
Qualification level		Consumer
Moisture Sensitivity Level	5x5 QFN	MSL1
ESD	Human Body Model	Class 1A
	Charged Device Model	NA
RoHS compliant		Yes

NOT RECOMMENDED FOR NEW DESIGNS

©2024-2026 TagoreTech Inc.

Electrical Specifications

NOT RECOMMENDED FOR NEW DESIGNS

Table 6: Electrical Specifications $T_A = +25°C; V_{DD} = +3.3V; 50\Omega$ source and load conditions[1].

Parameter	Condition	Minimum	Typical	Maximum	Unit
Operating frequency	f	700		4000	MHz
Insertion loss, TX	800 MHz		0.40		dB
	2.6 GHz		0.65		dB
	3.8 GHz		TBD		dB
Insertion loss, RX	800 MHz		0.6		dB
	2.6 GHz		0.75		dB
	3.8 GHz		TBD		dB
Isolation	800 MHz		35		dB
$ANT - TX$	2.6 GHz		22		dB
	3.8 GHz		TBD		dB
Isolation	800 MHz		50		dB
$ANT - RX$	2.6 GHz		45		dB
	3.8 GHz		TBD		dB
Return loss, RX	800 MHz		-28		dB
	2.6 GHz		-23		dB
	3.8 GHz		TBD		dB
Return loss, TX	800 MHz		-17		dB
	2.6 GHz		-17		dB
	3.8 GHz		TBD		dB
H_2	800 MHz, $P_{in} = 35$ dBm		-35		dBm
H_3	800 MHz, $P_{in} = 35$ dBm		-40		dBm
IIP3	800 MHz		60		dBm

[1] All information is based on individual frequency tunes. See the PCB schematic and the tune elements in Schematics and Evaluation Board.

©2024-2026 TagoreTech Inc.

Table 7: Electrical Specifications $T_A = +25°C; V_{DD} = +3.3V; 50\Omega$ source and load conditions.

Parameter	Condition	Minimum	Typical	Maximum	Unit
Power and Compression point					
$P_{0.1dB}$ TX, ANT	2.6 GHz, CW signal		60		W
Peak $P_{0.1dB}$ TX, ANT	2.6 GHz, 1% duty cycle, 10 μs pulse width, $+85°C$		316		W
RX isolation at peak power	2.6 GHz		40		dB
Switching Time					
Switching time			2		μs
Power Supply, DC					
Control voltage	Power Supply V_{DD}	2.6	3.3	5.5	V
	V_1 control pin, V_{ih}	1.0	3.3	5.25	V
	All control pins, V_{il}	-0.3		0.5	V
Control current	I_{ih}, V_1			7.5	μA
	I_{il}, V_1		0		μA
Current consumption	Active mode (V_{DD} on)		160	200	μA

NOT RECOMMENDED FOR NEW DESIGNS

©2024-2026 TagoreTech Inc.

Switching time definition

Example of the definition by using 10 W/40 dBm signal. We apply 10W signal to RF port, stabilized with isolator. Isolator is needed as our switch shows to RF port approximately 4Ω impedance. Let's assume that the switch insertion loss is 0.3 dB. Therefore 90% of the RF signal is 39.55 dBm and 10% of the RF signal is 1W/30dBm. We need to take into account 0.3dB insertion loss, therefore numbers are 39.25 dBm and 29.7 dBm respectively. We change the control from low to high and our time reference point is when our control signal exceeds lower threshold value V_{ihlow}. In certain measurements when control signal rise time is significantly shorter than RF output signal, we approximate start of the clock with 50% point of the control signal.

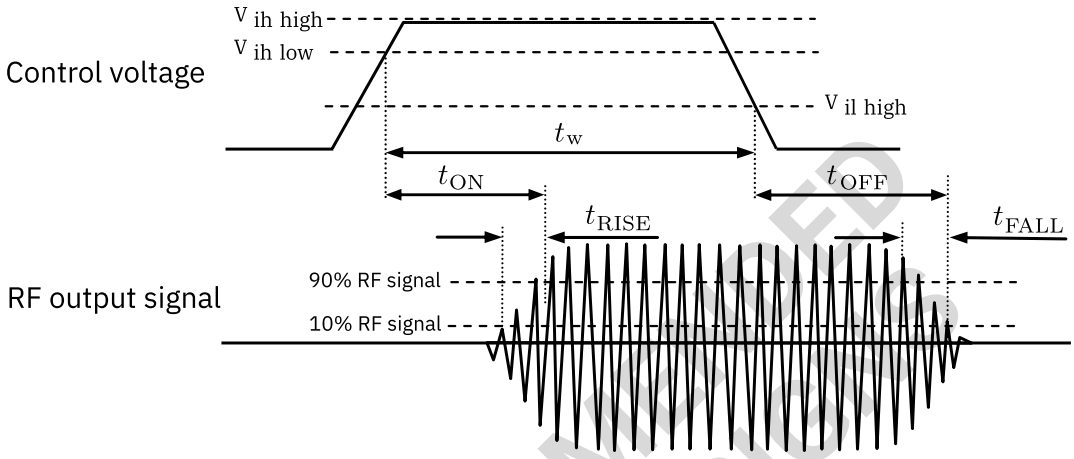

Figure 4: Switching time definition, t_{ON}, t_{OFF}, t_{RISE}, t_{FALL}. Minimum pulse width t_w.

Our component uses integrated charge pump. A 1 nF capacitor on the V_{CP} pin enables faster switching time.

NOT RECOMMENDED FOR NEW DESIGN

©2024-2026 TagoreTech Inc.

Switch Control table

Table 8: Switch Control Table

V_{DD}[1]	V_1	**Switch state**
1	0	$ANT - RX$ ON[2], TX series switch OFF
1	1	$ANT - TX$ ON, RX series switch OFF and RX shunt switch ON

[1] V_{DD} should be applied first before V_1.
[2] There is an internal pull-down to ground on the V_1 control pin, the state at start-up without any control voltage applied will be $ANT - RX$ ON.

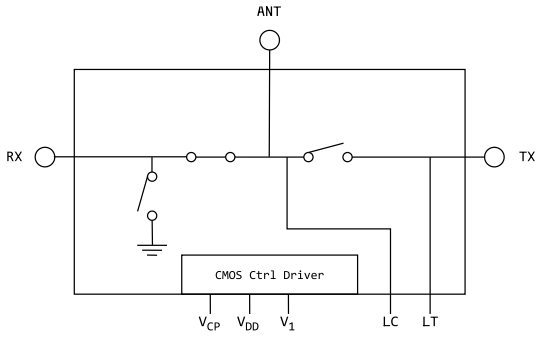

ANT-RX ON ($V_1 = 0$)

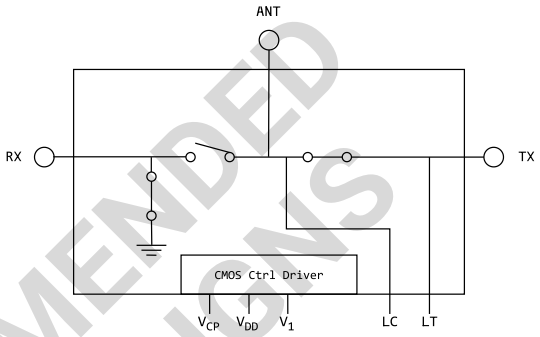

ANT-TX ON ($V_1 = 1$)

NOT RECOMMENDED FOR NEW DESIGNS

©2024-2026 TagoreTech Inc.

Theory of Operation

Asymmetrical switch topology

The TS7529N is an asymmetrical SPDT switch. The TX branch between ANT and TX has a series switch only, which gives low insertion loss (0.40 dB at 800 MHz, 0.65 dB at 2.6 GHz) and high peak power handling (316 W). The RX branch between ANT and RX has a series switch and a shunt switch; in the ANT-TX ON state the RX shunt switch connects the RX port to ground, which gives high ANT-RX isolation (50 dB at 800 MHz, 45 dB at 2.6 GHz).

Tuning inductor and tuning elements

Pins 17 (LT) and 18 (LC) are connections for an external tuning inductor L_T for the high frequency band. Pins 25 (Gx1) and 30 (Gx2) are optional connections for tuning to improve the RX isolation (C_{11} and R on the PCB schematic, Table 9).

Application Information

Applications of the TS7529N include cellular infrastructure, small cells, LTE relays and microcells, and satellite terminals. All electrical specifications are based on individual frequency tunes; the PCB schematic and the tune elements for 0.8 to 1 GHz and 2.5 to 2.7 GHz are given in Schematics and Evaluation Board.

The TS7529N is not recommended for new designs. For new designs, please consider the TS8029N (500 MHz to 5.0 GHz, 100 W CW, 631 W peak): TS8029N product page.

NOT RECOMMENDED FOR NEW DESIGNS

©2024-2026 TagoreTech Inc.

Schematics and Evaluation Board

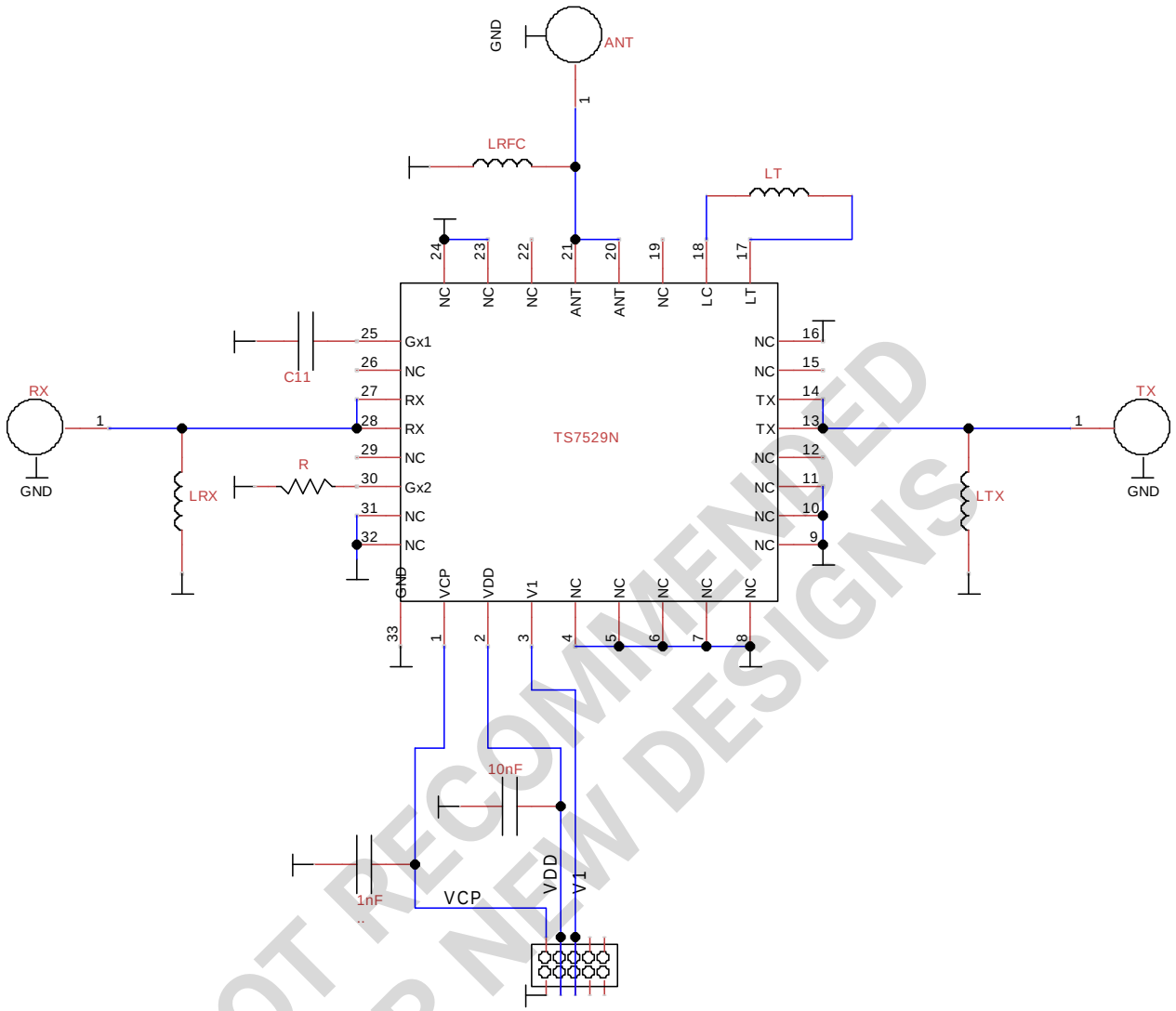

NOT RECOMMENDED FOR NEW DESIGNS

PCB schematic and configuration

Table 9: Tune elements for the frequency bands

Band	L_T	L_{RFC}	L_{TX}	L_{RX}	C_{11}	R	C_P
0.8 to 1.0 GHz	27 nH	Open	Open	Open	1.8 pF	270 kΩ	1 nF
2.5 to 2.7 GHz	5.6 nH	8.2 nH	3.9 nH	8.2 nH	1.7 pF	270 kΩ	1 nF

Inductors: Coilcraft 0603HP series, close to the IC. Capacitors: Murata GCM155R series.

©2024-2026 TagoreTech Inc.

Typical characteristics

Typical characteristics, tuned for 2.5 to 2.7 GHz

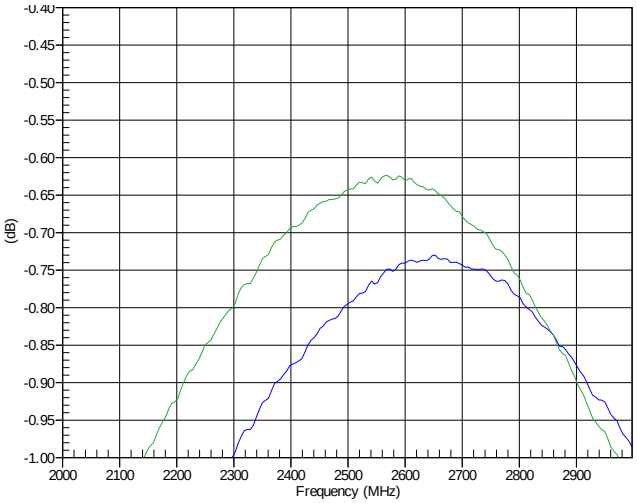

TX, RX insertion loss

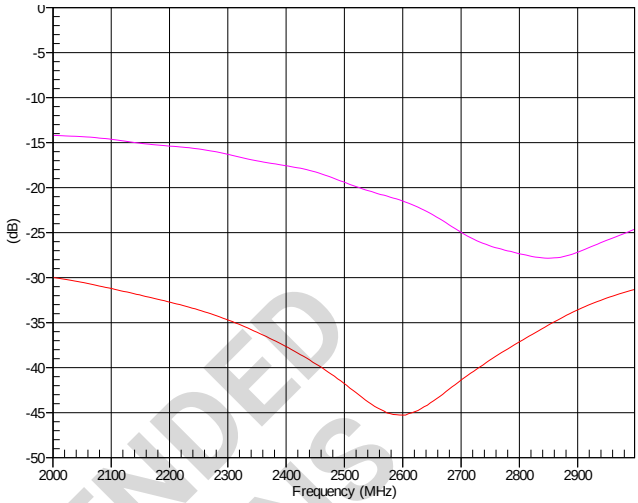

TX, RX isolation

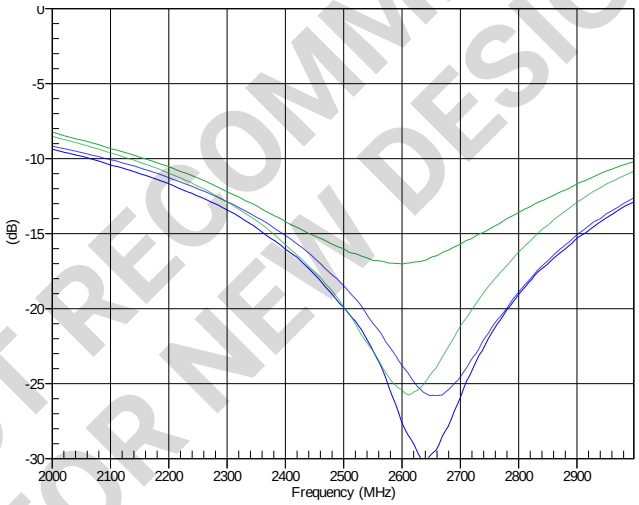

TX, RX return loss

NOT RECOMMENDED FOR NEW DESIGNS

©2024-2026 TagoreTech Inc.

Device Package information

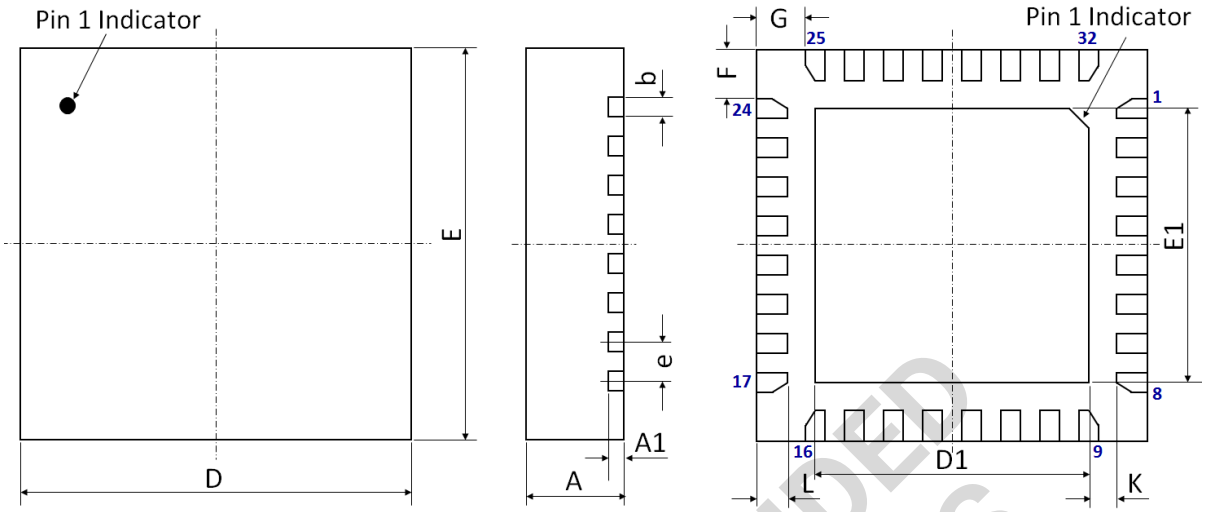

Figure 7: Device package drawing (all dimensions in mm).

Please refer to application notes TN-001 PCB Design guideline and TN-002 Solder Rework at TagoreTech web page for PCB and soldering guidelines.

Table 10: Device Package Dimensions

Dimension	Value [mm]	Tolerance [mm]	Dimension	Value [mm]	Tolerance [mm]
A	1.25	±0.05	E	5.00 BSC	±0.05
A1	0.203	±0.02	E1	3.10	±0.06
b	0.25	+0.05/-0.07	F	0.625	±0.05
D	5.00 BSC	±0.05	G	0.625	±0.05
D1	3.10	±0.06	L	0.40	±0.05
e	0.50 BSC	±0.05	K	0.50	±0.05

Lead finish: pure Sn without underlayer; thickness 7.5 μm to 20 μm (typical 10 μm to 12 μm).

NOT RECOMMENDED FOR NEW DESIGNS

©2024-2026 TagoreTech Inc.

Glossary

IL	Insertion loss
ISO	Isolation
RL	Return loss
VSWR	Voltage Standing Wave Ratio
ANT	Antenna port, RF common port
TX	Transmit port
RX	Receive port
L_T	External tuning inductor between pins 17 (LT) and 18 (LC)
Gx1, Gx2	Optional tuning pins to improve the RX isolation (pins 25 and 30)
NRND	Not recommended for new designs
LTE	Long Term Evolution

Changelog

Table 11: Changelog

Date	Revision	Notes
02/08/2021	1.8	Preliminary datasheet (Word).
10/31/2026	3.00	Transferred to the TagoreTech datasheet format for archiving; the content is unchanged from the preliminary datasheet revision 1.8 (units of the switching time and control currents corrected to μs and μA, return loss shown as negative values). Not recommended for new designs; the TS8029N is recommended for new designs. Links to application notes TN-001/TN-002, QR code link to the latest datasheet, glossary.

NOT RECOMMENDED FOR NEW DESIGNS

©2024-2026 TagoreTech Inc.

Legal Information

Published by

TagoreTech Inc.
601 Campus Drive, Suite B3
Arlington Heights, IL 60004, USA

©2024-2026 All Rights Reserved

TagoreTech is a fabless US semiconductor company specializing in GaN RF solutions: high-power RF switches in unique GaN-on-Si technology, RF power amplifiers in GaN-on-SiC, and reconfigurable front-end solutions — such as tunable power amplifiers and antenna tuning — that combine the two. TagoreTech serves defense, radar, datalink, 5G infrastructure, and public safety markets.

Legal Disclaimer

The information provided in this document is believed to be accurate and reliable, but shall in no event be regarded as a guarantee of conditions or characteristics. TagoreTech makes no warranties, express or implied, including without limitation any implied warranty of merchantability or fitness for a particular purpose. TagoreTech assumes no responsibility for the consequences of the use of this information, nor for any infringement of patents or other rights of third parties which may result from its use. No license is granted by implication or otherwise under any patent or patent rights of TagoreTech. Customers are responsible for validating the suitability of TagoreTech products in their own applications and for compliance with all applicable laws and regulations, including export control requirements. Specifications are subject to change without notice. Errors and omissions excepted.

Use in critical applications. TagoreTech products are not designed or authorized for use in life-support devices or systems, safety-critical applications, or applications where failure could reasonably be expected to cause personal injury, unless expressly agreed in writing by an authorized representative of TagoreTech. Any such use is at the customer's own risk.

NOT RECOMMENDED FOR NEW DESIGNS

Sales Contact

For further information on technology, delivery terms, conditions, and prices, please contact TagoreTech: support@tagoretech.com or contact our distributors or representatives as listed at TagoreTech website. Please click the blue links.

Recommended for new designs: TS8029N

The TS7529N is not recommended for new designs. For new designs, please consider the TS8029N: TS8029N Product Page, TS8029N Datasheet

DigiKey Digikey TS8029N

TS7529N Product Information

Latest version of TS7529N datasheet (archive) is available for download: TS7529N Datasheet

TagoreTech Inc. Product Brochure and datasheets

Tagore Product Brochure and links to all available datasheets is available for download:
TagoreTech Product Brochure

Scan for the latest datasheet