SP4T 100 W/250 W_{peak} RF Switch 1 MHz to 3.0 GHz

Features

- Frequency Range 1 MHz to 3.0 GHz
- Low insertion loss:
  0.18 dB @ 30 MHz
  0.40 dB @ 1.0 GHz
  0.74 dB @ 2.9 GHz, matched
- High isolation:
  60 dB @ 30 MHz
  37 dB @ 1.0 GHz
  23 dB @ 2.9 GHz, matched
- 100 W CW Power, 250 W_{peak} Peak Power
- Low power consumption, less than 1 mW
- No external DC blocking capacitors on RF lines
- All RF ports OFF state
- Charge pump disabled, −18 V supply needed, quiet at HF and VHF

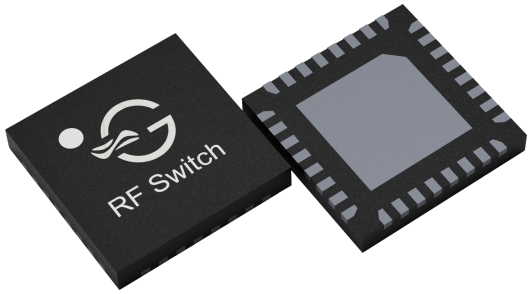

Figure 1: TS80430N in 5.0 x 5.0 mm^2 QFN 32-pin package.

Applications

- Private mobile and defense radios
- Public safety handsets
- Cellular infrastructure
- Satellite terminals
- Datalinks

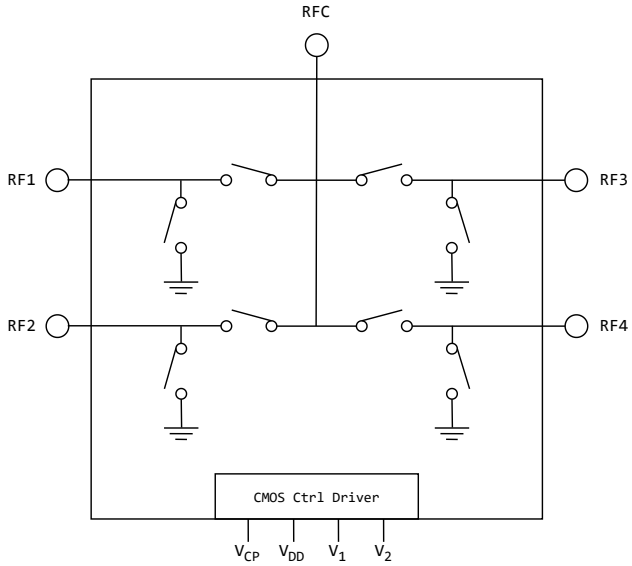

Figure 2: TS80430N functional diagram

General Description

The TS80430N is a 2nd Generation symmetrical reflective Single Pole Four Throw (SP4T) switch designed for high-power switching applications. The TS80430N covers 1 MHz to 3.0 GHz bandwidth and provides low insertion loss, high isolation, and high linearity within a small package size. With 100 W CW power handling and 250 W peak power capability, the TS80430N is well suited for applications requiring low insertion loss, high isolation, and high linearity. No external RF DC-blocking capacitors are required.

In the TS80430N, the internal charge pump is disabled, eliminating charge-pump switching noise at HF and VHF frequencies. An external -18 V supply is therefore required for operation.

The TS80430N is housed in a compact 5.0×5.0 mm^2 32-lead Quad Flat No-lead (QFN) plastic package.

RoHS

RoHS10/REACH/Halogen free

Contents

Features 1
Applications 1
General Description 1
Ordering information 3
Pin Assignment 4
Absolute Maximum Ratings 5
Electrical Specifications 6
Switching time definition . . . 11
Switch Control table 12
Theory of Operation 14
Isolation modes . . . 14
Device powered off . . . 14
External V_{CP} supply of -18 V . . . 14
Application Information 14
Schematics and Evaluation Board 15
Performance upto 1.6 GHz, unmatched . . . 16
Matching examples (IDX01 to IDX04) . . . 18
Typical characteristics 19
Performance upto 1.6 GHz, unmatched (IDX00) . . . 19
Performance 1300 to 1600 MHz, band-pass matching (IDX01) . . . 22
Performance for Link 16, 969 to 1206 MHz (IDX02) . . . 25
Performance for IFF, 1030/1090 MHz (IDX03) . . . 28
Wideband performance upto 3.0 GHz (IDX04) . . . 31
Peak power handling with modulated signals . . . 34
Peak-to-average power ratio of QAM signals . . . 34
Crest factor reduction for OFDM . . . 35
Average power capability with modulated signals . . . 35
Power Derating . . . 37
Device Package information 38
PCB Land Design 40
PCB Stencil Design 42
Tape and Reel Information 43
Glossary 44
Changelog . . . 44
Legal Information 46
Published by . . . 46
Legal Disclaimer . . . 46
Sales Contact . . . 46
Buy TS80430N directly . . . 46
TS80430N Product Information . . . 46
TagoreTech Inc. Product Brochure and datasheets . . . 46

©2024-2026 TagoreTech Inc.

Ordering information

Table 1: Ordering Information

Device Part Number	Package Type	Notes
TS80430N	32-Pin 5.0x5.0x0.75 mm^3 QFN	Core part number
TS80430N-EVB	Evaluation Board	
TS80430NMTRPBF[1]	330 mm reel, 3 000 pcs	Full reel

[1] MTRPBF - M: Manufacturing, TR: Tape and Reel, and PBF: lead free.

Table 2: Tape and Reel Information

Form	Quantity	Reel Diameter	Reel Width
Tape and Reel	3 000	13” (330mm)	18mm

©2024-2026 TagoreTech Inc.

Pin Assignment

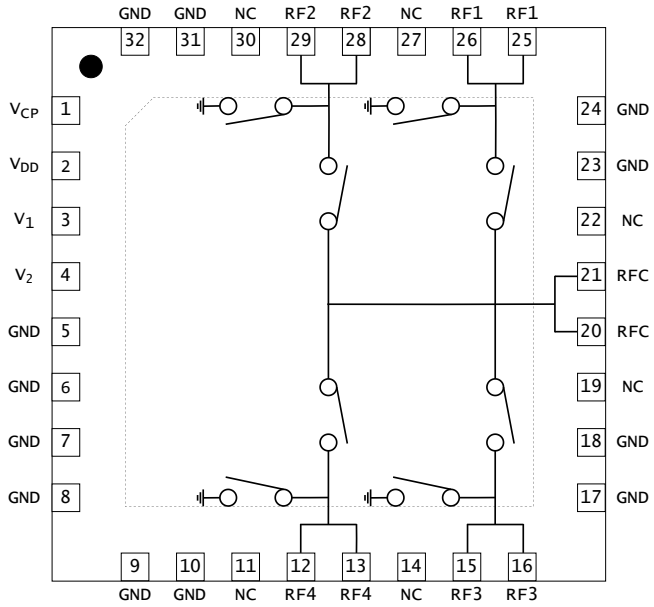

Figure 3: TS80430N pin assignment [top view]

Table 3: Pin Definition

Pin Number	Pin Name	Description
1	V_{CP}	Internal charge pump disabled, -18 V supply needed on this pin. Decouple with a 1 nF capacitor to GND.
2	V_{DD}	DC Power Supply
3	V_1	Switch control input 1
4	V_2	Switch control input 2
12, 13	RF4	RF port 4, please connect together
15, 16	RF3	RF port 3, please connect together
20, 21	RFC	RF Common port / Antenna port, please connect together
25, 26	RF1	RF port 1, please connect together
28, 29	RF2	RF port 2, please connect together
11,14,19,22,27,30	NC	NC, Do not connect for adequate clearance and creepage
5,6,7,8,9,10,17	GND	Connect to ground[2]
18,23,24,31,32		
33 [1]	GND	Ground thermal pad, please connect to GND

[1] The backside ground (thermal) pad of the package must be grounded directly to the ground plane of PCB with multiple vias, and adequate heat sinking must be used to ensure proper operation and thermal management.
[2] These pins are NC pins inside the package. To avoid floating pins around RF lines, we request these to be connected to ground.

©2024-2026 TagoreTech Inc.

Absolute Maximum Ratings

Table 4: Absolute Maximum Ratings $T_A = +25$°C unless otherwise specified[1].

Parameter	Symbol	Value	Unit
Electrical Ratings			
Power Supply Voltage	V_{DD}	5.5	V
Negative supply voltage, external, on V_{CP} pin[5]	V_{CP}	-20	V
Storage Temperature Range	T_{st}	−55 – 125	°C
Operating Temperature Range	T_{op}	−40 – 85	°C
Maximum Junction Temperature	T_j	+140	°C
Max RF CW input power, 10-f_{max}[3]	RFx / RFC	51	dBm
Max RF CW input power, 10-f_{max}, VSWR 8:1[3]	RFx / RFC	47	dBm
Max RF peak voltage 30MHz	RFx / RFC	160	V
Max RF peak voltage f_{max}	RFx / RFC	160	V
Thermal Ratings			
Thermal Resistance (junction-to-case) – Bottom side	$R_{\theta jc}$	3.0	°C/W
Soldering Temperature	T_{solder}	+260	°C
ESD Ratings			
Human Body Model (HBM)	Level 1B	500 – <1000	V
Charged Device Model (CDM)	Level C3	≥1000	V
Moisture Rating			
Moisture Sensitivity Level[4]	MSL	1	

[1] Maximum ratings are absolute ratings. Exposure to absolute maximum rating conditions for extended periods may affect device reliability and can cause permanent damage to the device. Exceeding one or a combination of the absolute maximum ratings may cause permanent and irreversible damage to the device and/or to surrounding circuit. Functional operation of the device is not implied in any conditions above those indicated in the Electrical Specifications section.
[2] Test frequency 800MHz.
[3] See Power Derating table for low frequencies.
[4] Tagore recommends to store parts in moisture barrier bag to preserve solderability.
[5] Internal charge pump disabled, the external -18 V supply is required. V_{DD} must be applied first, minimum 50 μs before V_{CP}; shutdown in the opposite order.

©2024-2026 TagoreTech Inc.

Electrical Specifications

Table 5: Electrical Specifications $T_A = +25°C; V_{DD} = +3.3V; V_{CP} = -18V; 50\Omega$ Source/Load.

Parameter	Condition	Minimum	Typical	Maximum	Unit
Operating frequency	f	1		3000	MHz
Insertion loss	30 MHz		0.18		dB
unmatched (IDX00)	500 MHz		0.26		dB
RFC – RFx	1.0 GHz		0.40		dB
	1.6 GHz		0.86		dB
Insertion loss[1]	1.0 GHz		0.60		dB
1300–1600 MHz (IDX01)	1.2 GHz		0.39		dB
RFC – RFx	1.4 GHz		0.36		dB
	1.6 GHz		0.48		dB
Insertion loss[1], Link 16 (IDX02)	950 MHz		0.33		dB
RFC – RFx	1250 MHz		0.31		dB
Insertion loss[1], IFF (IDX03)	1000 MHz		0.29		dB
RFC – RFx	1120 MHz		0.29		dB
Insertion loss[1]	500 MHz		0.40		dB
wideband (IDX04)	1.5 GHz		0.65		dB
RFC – RFx	1.7 GHz		0.61		dB
	2.3 GHz		0.53		dB
	2.8 GHz		0.77		dB
	2.9 GHz		0.74		dB

[1] Matched values are not guaranteed as they include performance of matching components. These components are beyond control of TagoreTech and therefore given values are indications, not guaranteed values.

©2024-2026 TagoreTech Inc.

Table 6: Electrical Specifications $T_A = +25°C; V_{DD} = +3.3V; V_{CP} = -18V; 50\Omega$ Source/Load.

Parameter	Condition	Minimum	Typical	Maximum	Unit
Operating frequency	f	1		3000	MHz
Isolation	30 MHz		60		dB
unmatched (IDX00)	500 MHz		44		dB
$RFC - RFx$	1.0 GHz		37		dB
	1.6 GHz		32		dB
Isolation[1]	1.0 GHz		38		dB
1300–1600 MHz (IDX01)	1.2 GHz		36		dB
$RFC - RFx$	1.4 GHz		34		dB
	1.6 GHz		33		dB
Isolation[1], Link 16 (IDX02)	950 MHz		37		dB
$RFC - RFx$	1250 MHz		35		dB
Isolation[1], IFF (IDX03)	1000 MHz		37		dB
$RFC - RFx$	1120 MHz		36		dB
Isolation[1]	500 MHz		43		dB
wideband (IDX04)	1.5 GHz		33		dB
$RFC - RFx$	1.7 GHz		31		dB
	2.3 GHz		27		dB
	2.8 GHz		24		dB
	2.9 GHz		23		dB

[1] Matched values are not guaranteed as they include performance of matching components. These components are beyond control of TagoreTech and therefore given values are indications, not guaranteed values.

©2024-2026 TagoreTech Inc.

Table 7: Electrical Specifications $T_A = +25°C; V_{DD} = +3.3V; V_{CP} = -18V; 50\Omega$ Source/Load.

Parameter	Condition	Minimum	Typical	Maximum	Unit
Operating frequency	f	1		3000	MHz
Return Loss	30 MHz		-32		dB
unmatched (IDX00)	500 MHz		-19		dB
$RFC - RFx$	1.0 GHz		-15		dB
	1.6 GHz		-9		dB
Return Loss[1]	1.0 GHz		-11		dB
1300–1600 MHz (IDX01)	1.2 GHz		-15		dB
$RFC - RFx$	1.4 GHz		-17		dB
	1.6 GHz		-14		dB
Return Loss[1], Link 16 (IDX02)	950 MHz		-19		dB
$RFC - RFx$	1250 MHz		-25		dB
Return Loss[1], IFF (IDX03)	1000 MHz		-23		dB
$RFC - RFx$	1120 MHz		-29		dB
Return Loss[1]	500 MHz		-14		dB
wideband (IDX04)	1.5 GHz		-12		dB
$RFC - RFx$	1.7 GHz		-13		dB
	2.3 GHz		-20		dB
	2.8 GHz		-13		dB
	2.9 GHz		-14		dB

[1] Matched values are not guaranteed as they include performance of matching components. These components are beyond control of TagoreTech and therefore given values are indications, not guaranteed values.

©2024-2026 TagoreTech Inc.

Table 8: Electrical Specifications $T_A = +25$°C; $V_{DD} = +3.3$V; $V_{CP} = -18$V; 50Ω Source/Load.

Parameter	Condition	Minimum	Typical	Maximum	Unit
Operating frequency	f	1		3000	MHz
Harmonic Distortion					
H_2	800MHz, P_{in} =47dBm		-88		dBc
H_3	800MHz, P_{in} =47dBm		-85		dBc
IIP3	800MHz		tbd		dBm
Power and Compression point					
P_{maxCW}[2]	Max RF CW Power 10-f_{max}		50		dBm
P_{maxpeak}	Max RF Peak Power 400-f_{max}		54		dBm
$P_{\text{maxhot RFC}}$[5]	Max RF CW Power, hot switching		50		dBm
$P_{\text{maxhot RFx}}$[5]	Max RF CW Power, hot switching		42		dBm
$P_{0.1\text{dB}}$	800MHz, CW		51		dBm
$P_{1\text{dB}}$[1]	800MHz, CW		54		dBm
$P_{\text{peak0.1dB}}$	800MHz, 1% duty cycle, 10μs pulse		54		dBm

[1] $P_{1\,\text{dB}}$ has been given for comparison reasons only. Please do not exceed Absolute Maximum ratings.
[2] See Power Derating table
[5] Dependent on thermal design and surrounding circuits.

©2024-2026 TagoreTech Inc.

Table 9: Electrical Specifications $T_A = +25°C; V_{DD} = +3.3V; V_{CP} = -18V; 50\Omega$ Source/Load.

Parameter	Condition	Minimum	Typical	Maximum	Unit
Operating frequency	f	1		3000	MHz
Noise					
CP switching noise[4]	RBW=1kHz		-140		dBm
Switching Time					
t_{ON}[8]	Switch ON time		12.0		μs
t_{OFF}[8]	Switch OFF time		12.0		μs
t_{RISE}[8]	Switch RISE time		8.0		μs
t_{FALL}[8]	Switch FALL time		10.0		μs
t_{wON}	Minimum Switch ON time		3.6		μs
t_{wOFF}	Minimum Switch OFF time		3.6		μs
$f_{PRR}, V_{CPext} = -18$ V[6]	Maximum pulse repetition rate		>20		kHz
$t_{startup}, V_{CPext} = -18$ V[6]	startup time		tbd		ms
Power Supply, DC					
Power supply[9]	V_{CP}	-19	-18	-17	V
Power supply[10]	I_{CP}		100		μA
Control voltage[7]	Power Supply V_{DD}	2.6	3.3	5.25	V
	All control pins high, V_{ih}	1.0	3.3	5.25	V
	All control pins low, V_{il}	-0.3	0	0.5	V
Control current	All control pins high, I_{ih}			7.5	μA
	All control pins low, I_{il}		0		μA
Current consumption	I_{DD}, active mode (V_{DD} on)		160	260	μA

[4] TS80430N has the internal charge pump disabled and therefore requires an external -18 V supply. The whole frequency range is free of charge-pump switching noise; the noise level is less than -140 dBm/kHz.
[5] Dependent on thermal design and surrounding circuits.
[6] External -18 V applied to V_{CP} pin.
[7] Control voltage V_{ih} cannot be higher than V_{DD} (to avoid forward biasing of ESD diode)
[8] Switching time characterization done at 30 Hz and 500 Hz pulse repetition rate (rate to change switch state, for example between RFC-RF1 and RFC-RF2).
[9] V_{DD} should be applied first before V_{CP}. Minimum time between V_{DD} and V_{CP} should be 50 μs.
[10] Depends on the pulse repetition rate, up to 10 mA at 20 kHz pulse repetition rate.

©2024-2026 TagoreTech Inc.

Switching time definition

Example of the definition by using 10 W/40 dBm signal. We apply 10W signal to RF port, stabilized with isolator. Isolator is needed as our switch shows to RF port approximately 4Ω impedance. Lets assume that that switch insertion loss is 0.3 dB. Therefore 90% of the RF signal is 39.55 dBm and 10% of the RF signal is 1W/30dBm. We need to take into account 0.3dB insertion loss, therefore numbers are 39.25 dBm and 29.7 dBm respectively. We change the control from low to high and our time reference point is when our control signal exceeds lower threshold value V_{ihlow}. In certain measurements when control signal rise time is significantly shorter than RF output signal, we approximate start of the clock with 50% point of control signal.

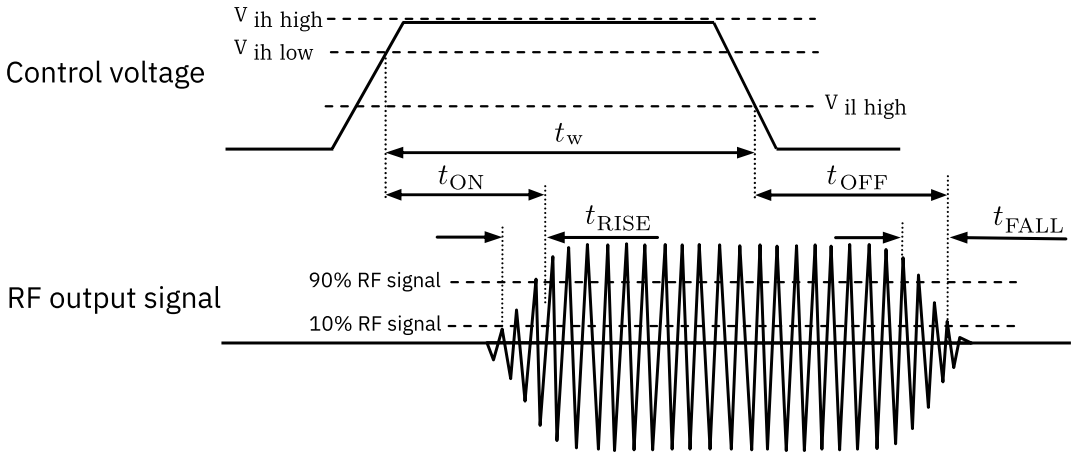

Figure 4: Switching time definition, t_{ON}, t_{OFF}, t_{RISE}, t_{FALL}. Minimum pulse width t_w.

In the TS80430N, the internal charge pump is disabled and an external -18 V supply to V_{CP} is required. Maximum pulse repetition rate f_{PRR} defines the maximum frequency for switching events. With the external -18 V supply, the switch can be driven at least to 20 kHz f_{PRR}. Expect current consumption of 10 mA from the -18 V supply at 20 kHz f_{PRR}.

©2024-2026 TagoreTech Inc.

Switch Control table

Table 10: Switch Control Table

V_{DD}[1]	V_2	V_1	**Switch state**
1	0	0	$RFC - RF1$ ON[2]
1	0	1	$RFC - RF2$ ON
1	1	0	$RFC - RF3$ ON
1	1	1	$RFC - RF4$ ON
0	0	0	V_{DD} off (Isolation), all FETs are on, short shown to RFC and RFx ports

[1] V_{DD} should be applied first before V_1, V_2 and the external -18 V on V_{CP} (minimum 50 μs between V_{DD} and V_{CP}), otherwise may cause damage to the device.
[2] There are internal pull-downs to ground on both V_1 and V_2 control pins, the state at start-up without any control voltage applied will be $RFC - RF1$ ON.

©2024-2026 TagoreTech Inc.

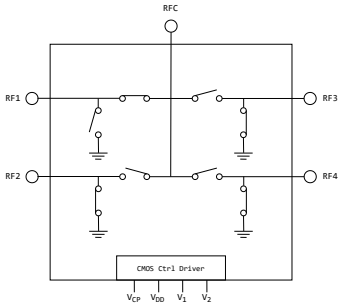

RFC-RF1 ON

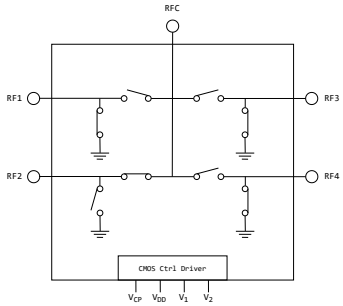

RFC-RF2 ON

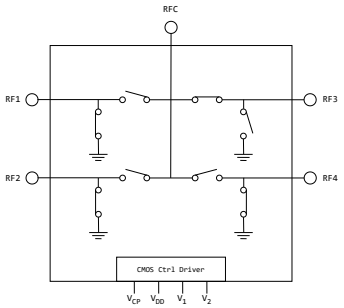

RFC-RF3 ON

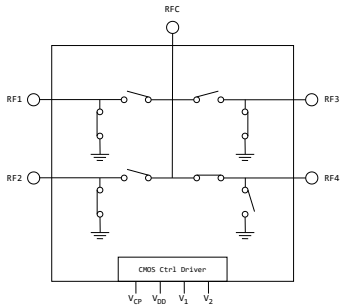

RFC-RF4 ON

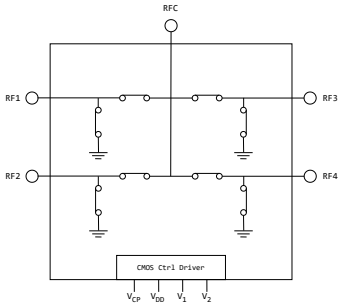

V_{DD} off state

©2024-2026 TagoreTech Inc.

Theory of Operation

Isolation modes

TS80430N has isolation mode when V_{DD} is turned off.

Device powered off

When V_{DD} is 0 V, all switch RF transistors are on, i.e. both the series and the shunt transistors are conducting. Every RF port is essentially connected to ground, including RFC port. This is practical when device is directly connected to RFC, there is certain protection against induced electrical fields. This can partially protect radio equipment against electrical fields, when device is not in usage.

External V_{CP} supply of -18 V

TS80430N requires external voltage supply to V_{CP}, as the internal charge pump is disabled. The external supply supports pulse repetition rate f_{PRR} of more than 20 kHz, in some cases even up to 100 kHz. It is mandatory to supply first V_{DD}, have a delay of 50 μs and then apply -18 V to V_{CP}. Shutdown should be in opposite order.

Application Information

TS80430N is offering 100 W/250 W_{peak} capability from 1 MHz to 3.0 GHz frequency band. Applications include narrowband and multi-octave wideband radios, jammers, EMC testing, public mobile radios, industrial and scientific applications. In the past, such applications were covered with power hungry and complex PIN diodes, TS80430N significantly reduces design complexity for such RF switching needs. TS80430N works well upto 1.6 GHz frequency without external matching components, for frequency above 1.6 GHz, matching is recommended. Datasheet provides matching examples and their performance.

©2024-2026 TagoreTech Inc.

Schematics and Evaluation Board

S-parameters of all presented EVB configurations (IDX00 to IDX04) can be downloaded from this link: Download TS80430N S-parameters

Table 11: Port definitions in s-parameter files and plots.

PIN name	Port numbers	S-parameters	Function
RFC	1	S11	
RF1	2	S22	
RF2	3	S33	
RF3	4	S44	
RF4	5	S55	
RF1ON	12	S21	RFC-RF1 ON
RF2ON	13	S31	RFC-RF2 ON
RF3ON	14	S41	RFC-RF3 ON
RF4ON	15	S51	RFC-RF4 ON

Content of s-parameter repository:

```
TS80430N.zip
├── TS80430N_IDX00_NoMatching ..... IDX00, no matching components
│   ├── Readme.txt ..... matching network description
│   ├── TS80430N_RF1ON_5PORT.s5p ..... S5P file for RFC-RF1 ON mode
│   ├── TS80430N_RF2ON_5PORT.s5p ..... S5P file for RFC-RF2 ON mode
│   ├── TS80430N_RF3ON_5PORT.s5p ..... S5P file for RFC-RF3 ON mode
│   ├── TS80430N_RF4ON_5PORT.s5p ..... S5P file for RFC-RF4 ON mode
│   └── TS80430N_VDDOFF_5PORT.s5p ..... S5P file for VDD off mode
├── TS80430N_IDX01_1300MHz-1600MHz ..... IDX01, 7.8 nH shunt inductor at RFC, 1300 to 1600 MHz
│   ├── Readme.txt ..... matching network description
│   ├── TS80430N_RF1ON_5PORT.s5p ..... S5P file for RFC-RF1 ON mode
│   ├── TS80430N_RF2ON_5PORT.s5p ..... S5P file for RFC-RF2 ON mode
│   ├── TS80430N_RF3ON_5PORT.s5p ..... S5P file for RFC-RF3 ON mode
│   └── TS80430N_RF4ON_5PORT.s5p ..... S5P file for RFC-RF4 ON mode
├── TS80430N_IDX02_L16 ..... IDX02, 1.0 pF shunt capacitor at RFC, Link 16
│   ├── Readme.txt ..... matching network description
│   ├── TS80430N_RF1ON_5PORT.s5p ..... S5P file for RFC-RF1 ON mode
│   ├── TS80430N_RF2ON_5PORT.s5p ..... S5P file for RFC-RF2 ON mode
│   ├── TS80430N_RF3ON_5PORT.s5p ..... S5P file for RFC-RF3 ON mode
│   ├── TS80430N_RF4ON_5PORT.s5p ..... S5P file for RFC-RF4 ON mode
│   └── TS80430N_VDDOFF_5PORT.s5p ..... S5P file for VDD off mode
├── TS80430N_IDX03_IFF ..... IDX03, 1.0 pF shunt capacitor at RFC, IFF
│   ├── Readme.txt ..... matching network description
│   ├── TS80430N_RF1ON_5PORT.s5p ..... S5P file for RFC-RF1 ON mode
│   ├── TS80430N_RF2ON_5PORT.s5p ..... S5P file for RFC-RF2 ON mode
│   ├── TS80430N_RF3ON_5PORT.s5p ..... S5P file for RFC-RF3 ON mode
│   ├── TS80430N_RF4ON_5PORT.s5p ..... S5P file for RFC-RF4 ON mode
│   └── TS80430N_VDDOFF_5PORT.s5p ..... S5P file for VDD off mode
└── TS80430N_IDX04_WB ..... IDX04, shunt capacitors at all ports, wideband to 3.0 GHz
    ├── Readme.txt ..... matching network description
    ├── TS80430N_RF1ON_5PORT.s5p ..... S5P file for RFC-RF1 ON mode
    ├── TS80430N_RF2ON_5PORT.s5p ..... S5P file for RFC-RF2 ON mode
    ├── TS80430N_RF3ON_5PORT.s5p ..... S5P file for RFC-RF3 ON mode
    ├── TS80430N_RF4ON_5PORT.s5p ..... S5P file for RFC-RF4 ON mode
    └── TS80430N_VDDOFF_5PORT.s5p ..... S5P file for VDD off mode
```


©2024-2026 TagoreTech Inc.

Performance upto 1.6 GHz, unmatched

TS80430N shows best performance upto 1.6 GHz frequency without any matching components. Only two external components are recommended, 1 nF for V_{CP} and 10 nF for V_{DD} lines for decoupling the external -18 V supply and the power supply.

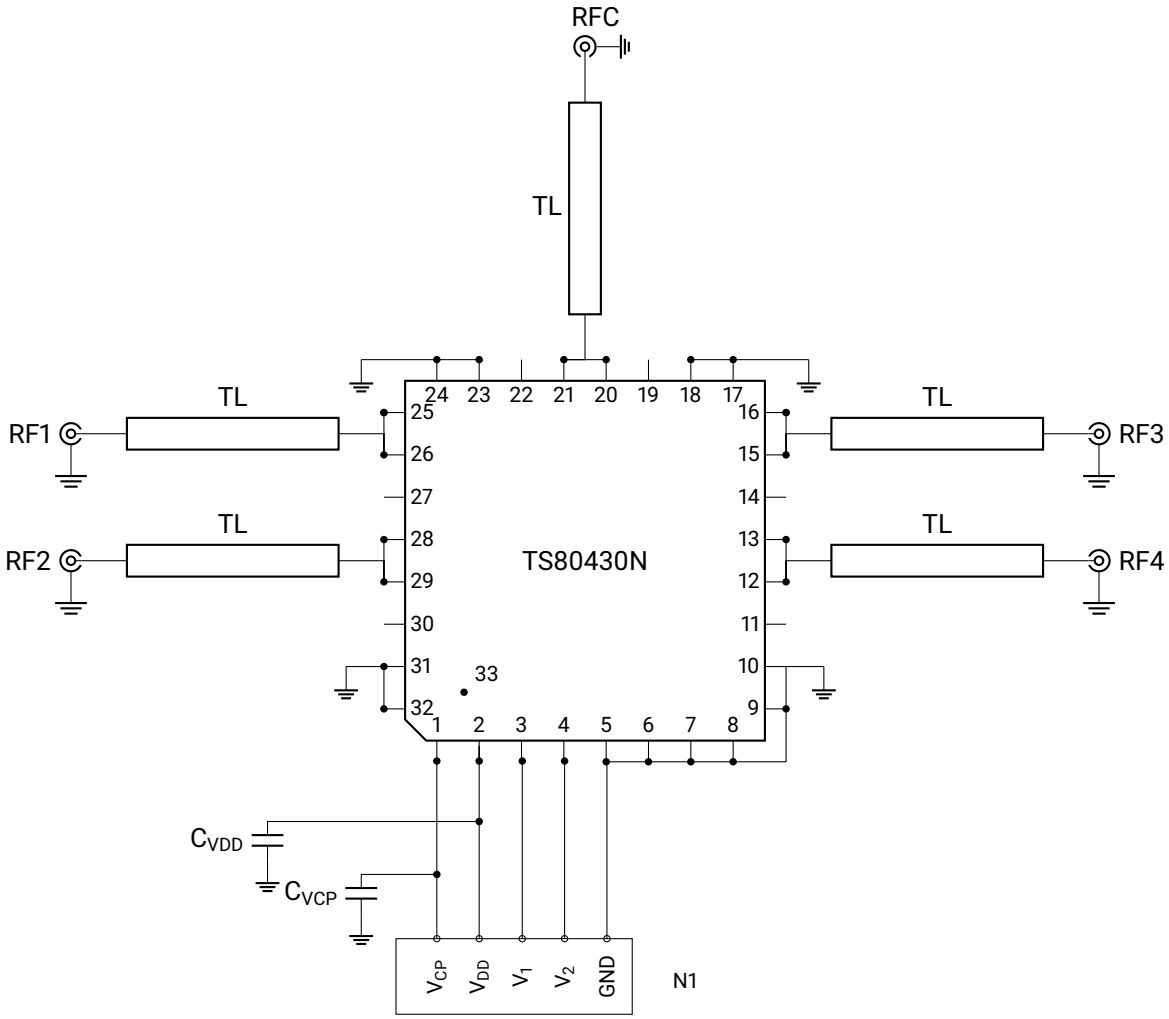

Schematics of TS80430N EVB without matching components

Table 12: Components used for TS80430N EVB

Reference	Part number / Value	Description	Notes
C_{VDD}	10nF	Capacitor	GRM155R71H103KA88
C_{VCP}	1 nF	Capacitor	GRM155R71H102KA01D

©2024-2026 TagoreTech Inc.

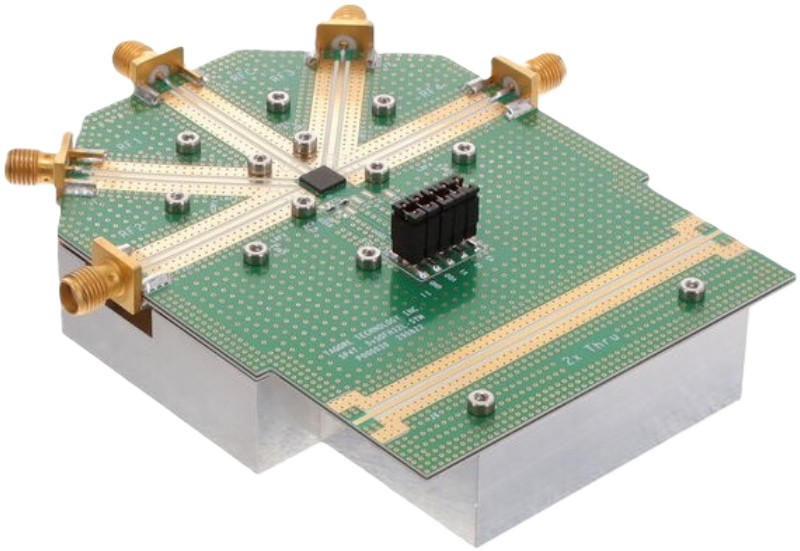

Photo of TS80430N EVB

©2024-2026 TagoreTech Inc.

Matching examples (IDX01 to IDX04)

The matching examples use the same EVB as the unmatched configuration. The matching elements are shunt components to ground on the RF traces: M_C at the RFC port and M_1 to M_4 at the RF1 to RF4 ports. The position of each element is given by the CPW length TL from the edge of the switch. Positions not listed in Table 13 are not populated. The supply capacitors C_{VDD} and C_{VCP} are the same as on the unmatched EVB.

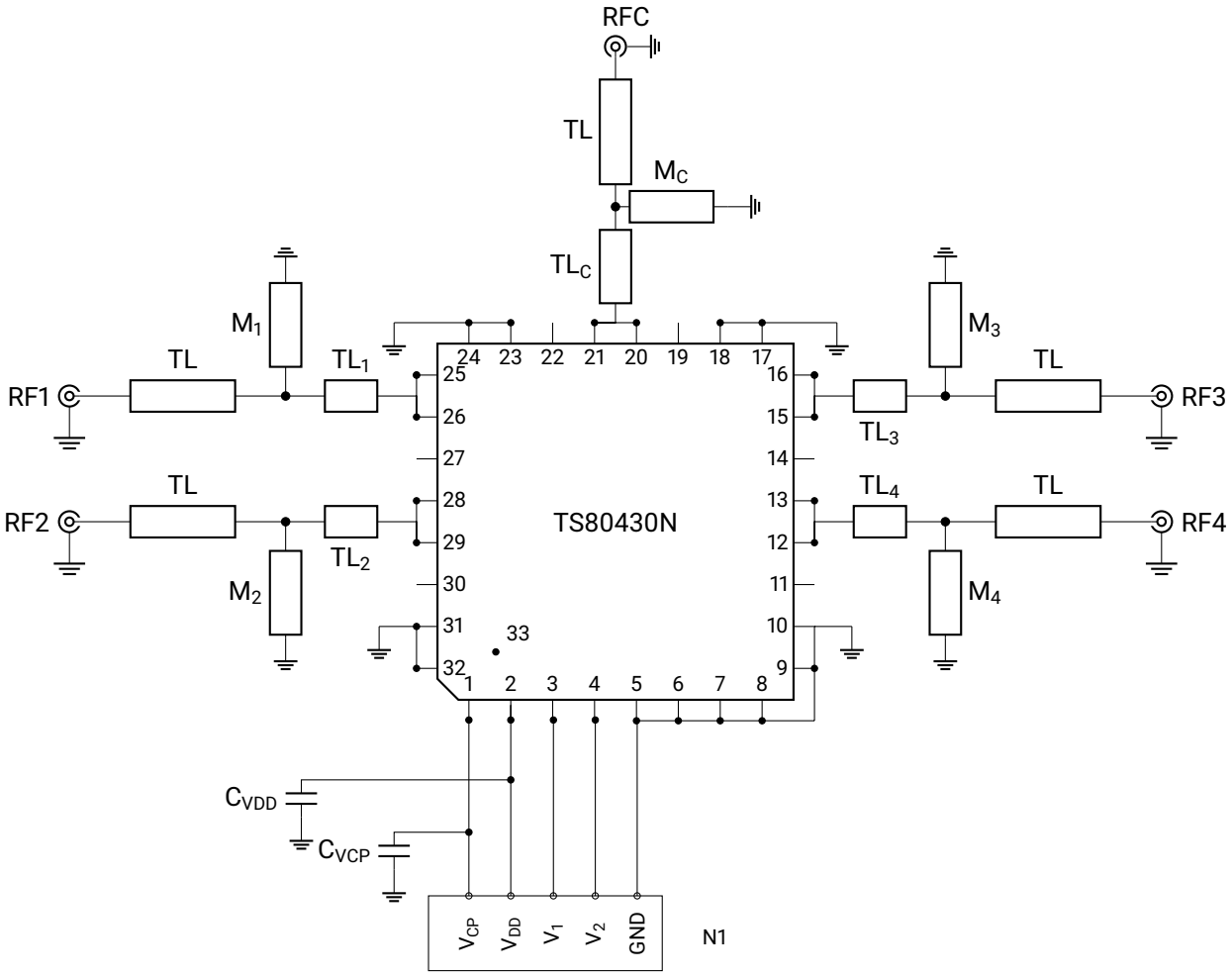

Schematics of TS80430N EVB with matching component positions

Table 13: Matching components used for IDX01 to IDX04

Reference	IDX01 1300–1600 MHz	IDX02 Link 16	IDX03 IFF	IDX04 Wideband
TL_C	0 mm[a]	27.9 mm[b]	31.3 mm[b]	9.1 mm[c]
M_C	7.8 nH inductor	1.0 pF capacitor	1.0 pF capacitor	0.8 pF capacitor
TL_1, TL_3	–	–	–	8.9 mm[c]
M_1, M_3	–	–	–	0.7 pF capacitor
TL_2, TL_4	–	–	–	9.4 mm[c]
M_2, M_4	–	–	–	0.6 pF capacitor

[a] Inductor soldered as close as possible to the RFC pin of the switch.
[b] Edge of the switch to the centre of the capacitor.
[c] Edge of the switch to the edge of the capacitor.

©2024-2026 TagoreTech Inc.

Typical characteristics

Performance upto 1.6 GHz, unmatched (IDX00)

These measurements were obtained using the TS80430N EVB with CPW (Coplanar Waveguide) losses de-embedded from the raw data. The device operates without requiring matching components for frequencies up to 1.6 GHz. For operation above 1.6 GHz, performance can be significantly improved by implementing port matching networks. The matching examples IDX01 to IDX04 (Table 13) optimise the performance for selected bands and extend the operation up to 3.0 GHz. All performance plots are based on EVB_IDX00 configuration. Complete S-parameter data is available in the accompanying file.

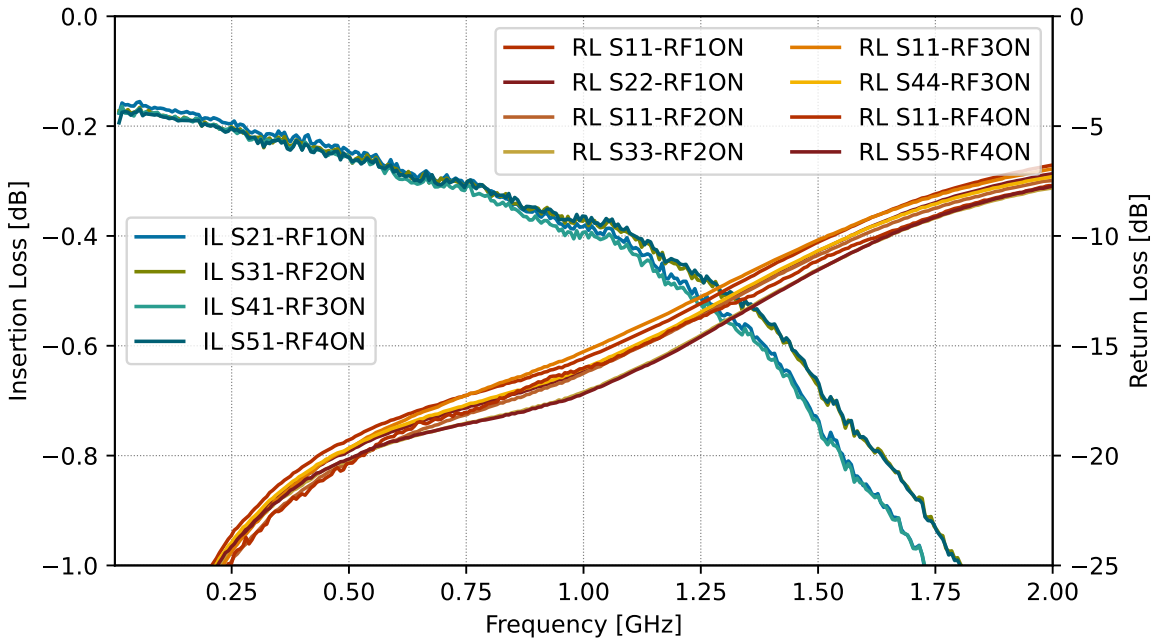

Insertion loss and Return loss, $\mathrm{RFC} - \mathrm{RFx}$.

©2024-2026 TagoreTech Inc.

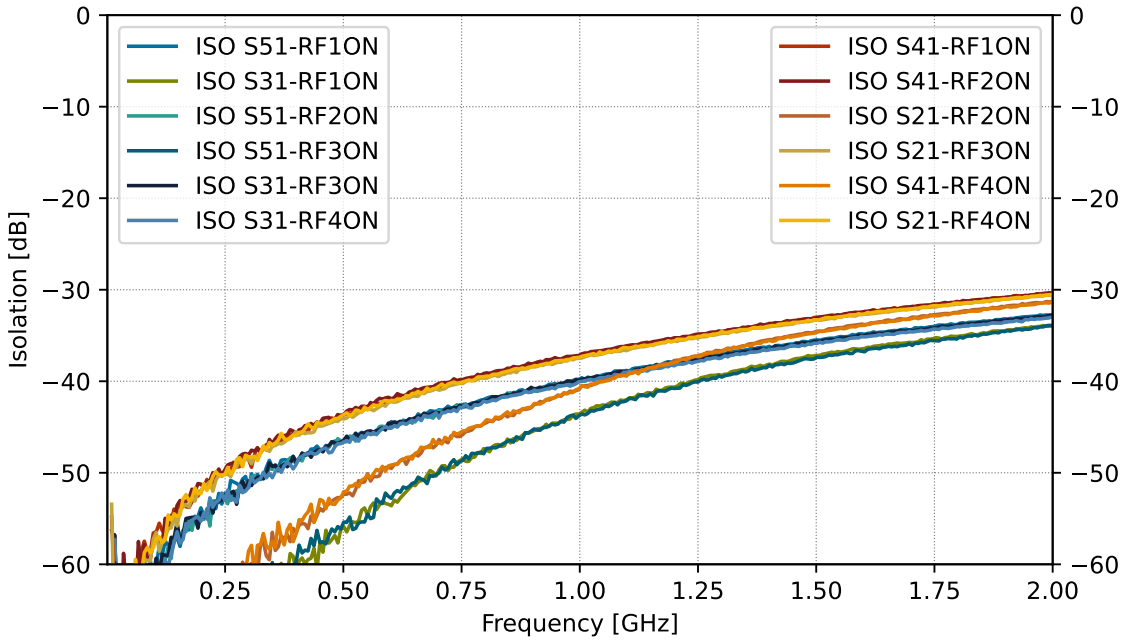

RFC – RFx isolation of non-active ports.

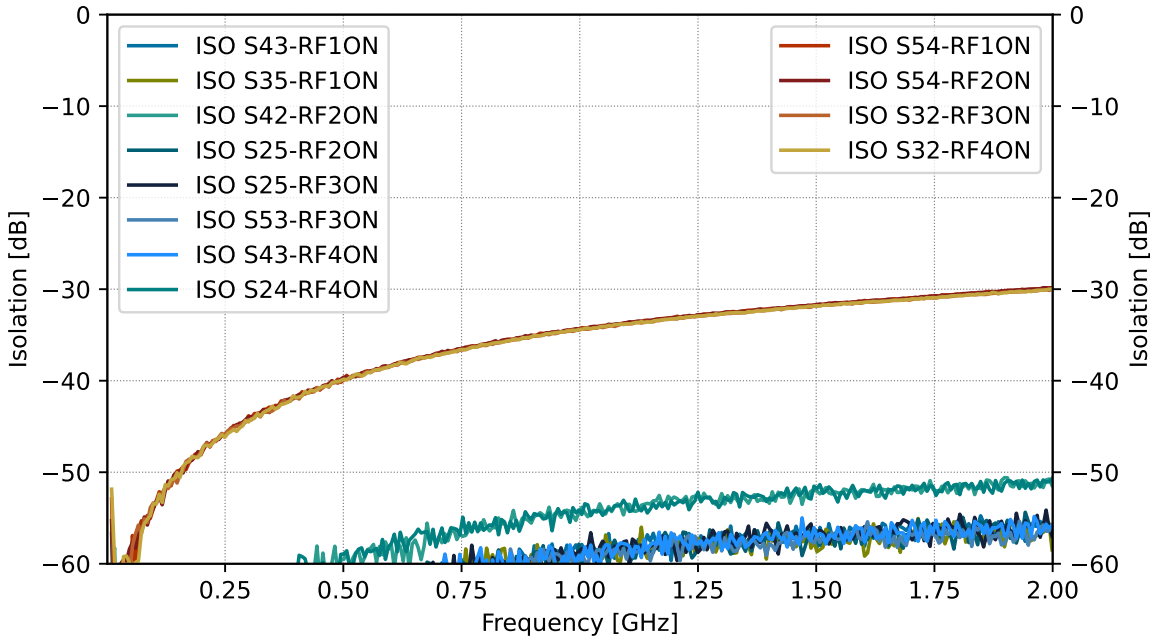

RFx – RFx isolation of non-active ports. Red/orange color curves are adjacent paths.

©2024-2026 TagoreTech Inc.

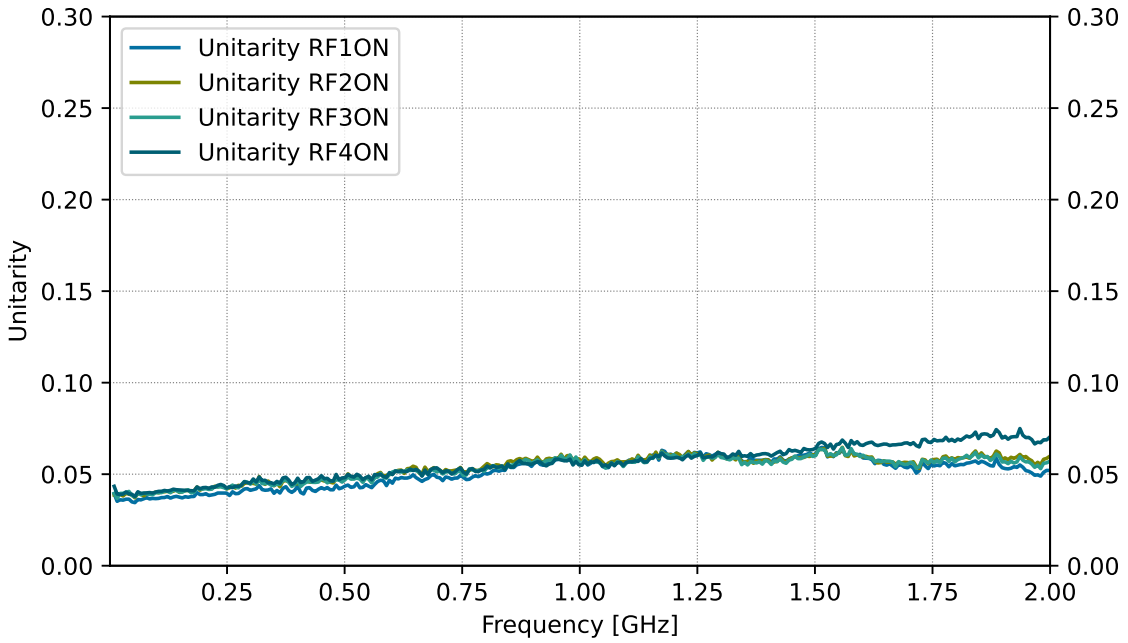

Unitarity, power absorption of the component, $1 - |S_{11}|^2 - |S_{21}|^2 - |S_{31}|^2 - |S_{41}|^2 - |S_{51}|^2$

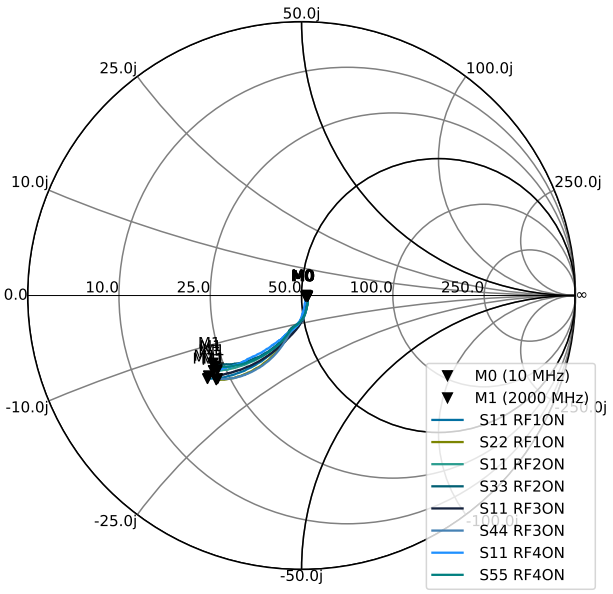

Matching of active port

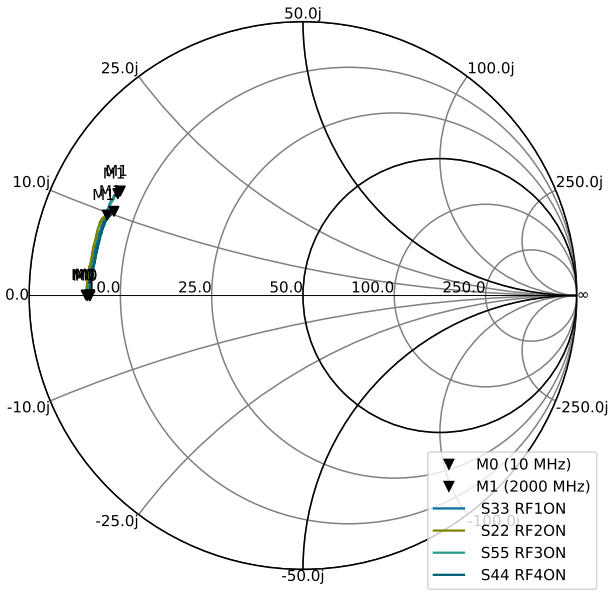

Termination impedance of non-active RFx.

©2024-2026 TagoreTech Inc.

Performance 1300 to 1600 MHz, band-pass matching (IDX01)

These measurements were obtained using the TS80430N EVB with a 7.8 nH shunt inductor at the RFC port, soldered as close as possible to the RFC pin (Table 13). CPW losses have been de-embedded from the measurements, but the losses of the matching components are included. The matching is optimised for the 1300 to 1600 MHz band. In this band, insertion loss is 0.33 to 0.48 dB, return loss is better than 13.8 dB, RFC – RFx isolation is better than 32.8 dB and RFx – RFx isolation is better than 30.4 dB. The shunt inductor attenuates low frequencies, insertion loss increases strongly below 1 GHz. These plots are based on EVB_IDX01, see s-parameter file.

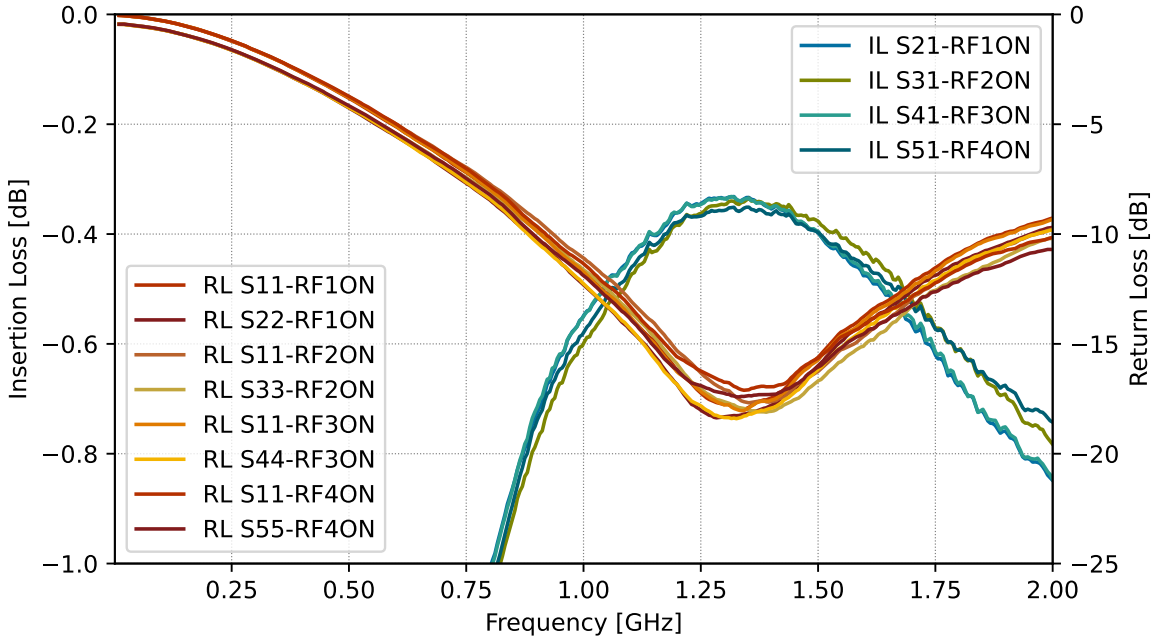

Insertion loss and Return loss, RFC – RFx.

©2024-2026 TagoreTech Inc.

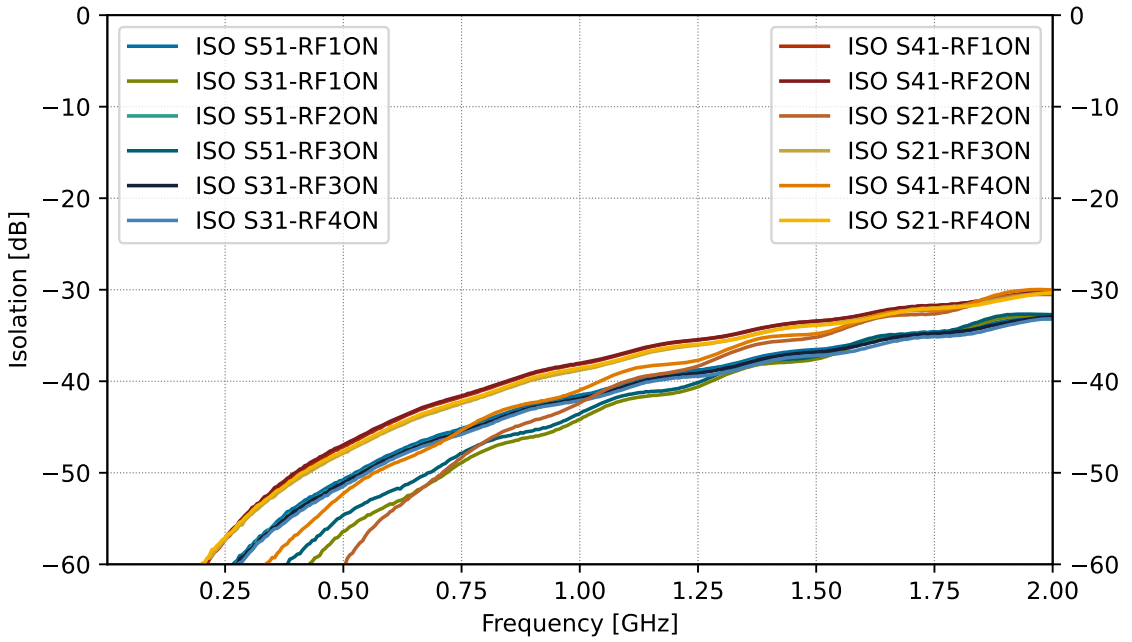

RFC – RFx isolation of non-active ports.

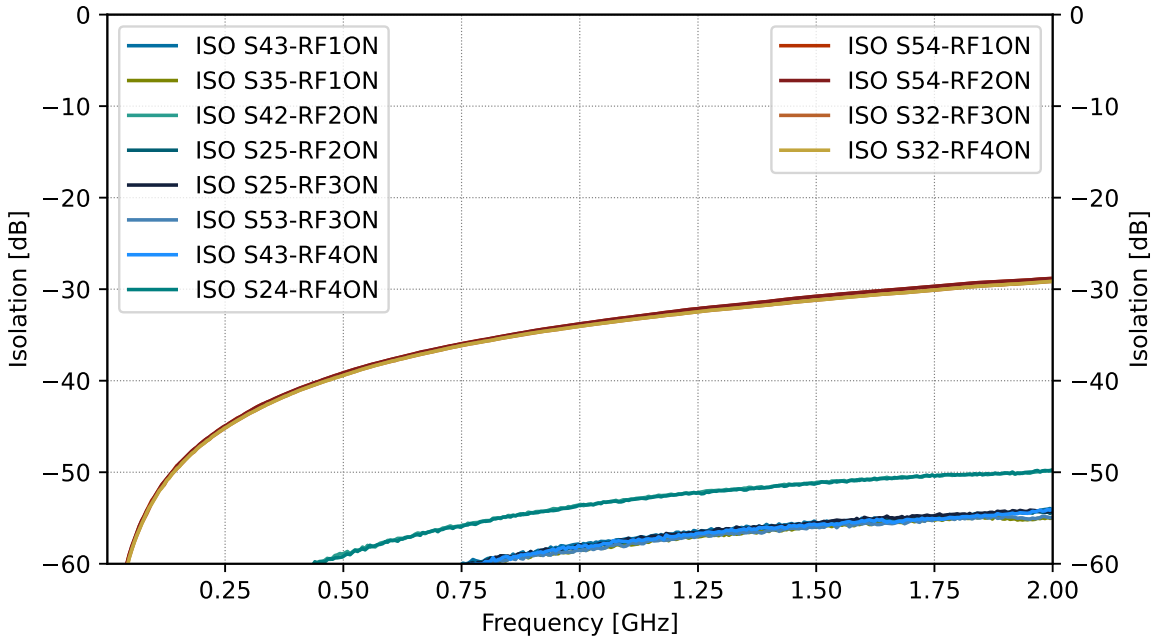

RFx – RFx isolation of non-active ports. Red/orange color curves are adjacent paths.

©2024-2026 TagoreTech Inc.

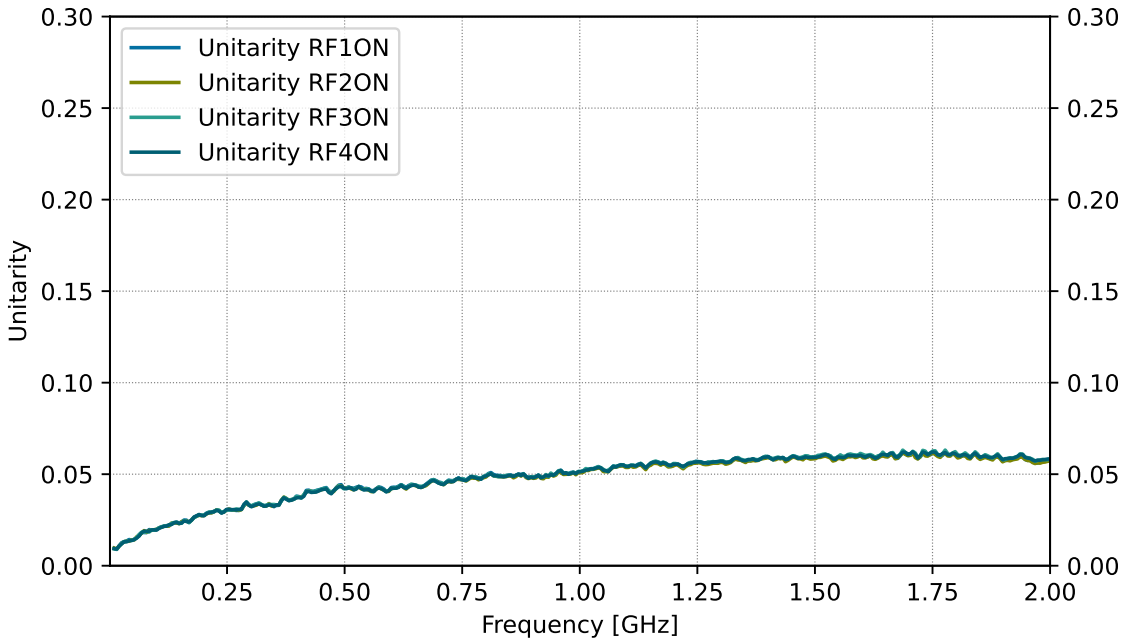

Unitarity, power absorption of the component, $1 - |S_{11}|^2 - |S_{21}|^2 - |S_{31}|^2 - |S_{41}|^2 - |S_{51}|^2$

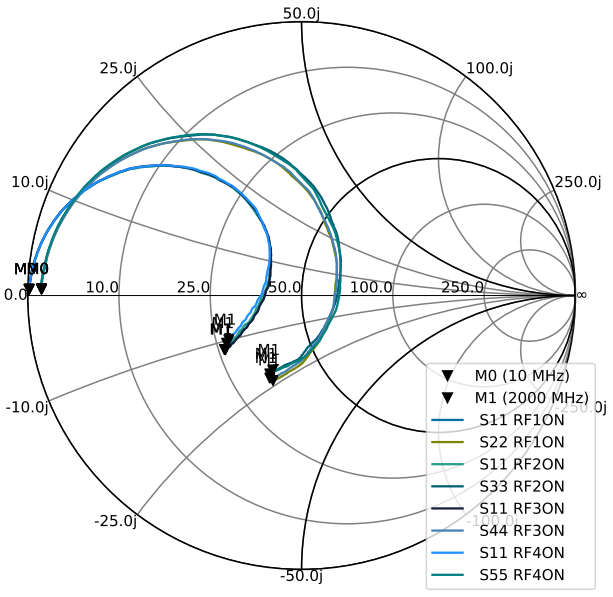

Matching of active port

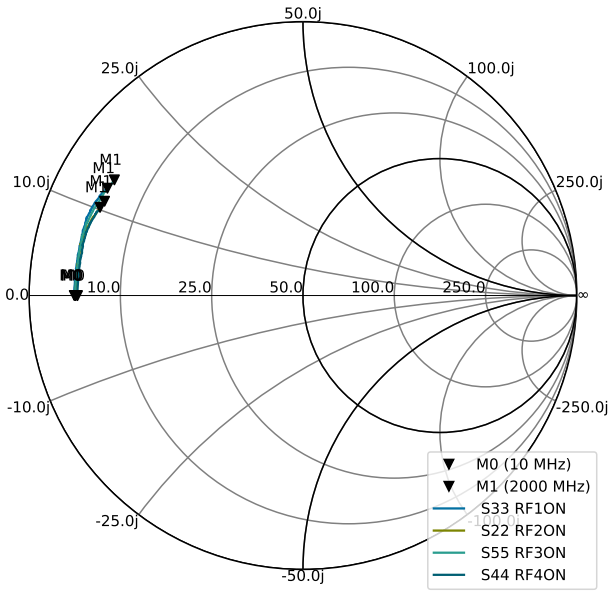

Termination impedance of non-active RFx.

©2024-2026 TagoreTech Inc.

Performance for Link 16, 969 to 1206 MHz (IDX02)

These measurements were obtained using the TS80430N EVB with a 1.0 pF shunt capacitor at the RFC port, placed 27.9 mm from the edge of the switch to the centre of the capacitor (Table 13). CPW losses have been de-embedded from the measurements, but the losses of the matching components are included. In the Link 16 band from 969 to 1206 MHz, insertion loss is 0.30 to 0.32 dB, return loss is better than 19.1 dB, $\mathrm{RFC} - \mathrm{RFx}$ isolation is better than 35.0 dB and $\mathrm{RFx} - \mathrm{RFx}$ isolation is better than 32.7 dB. From 960 to 1250 MHz, insertion loss is 0.30 to 0.33 dB and return loss is better than 18.9 dB. These plots are based on EVB_IDX02, see s-parameter file.

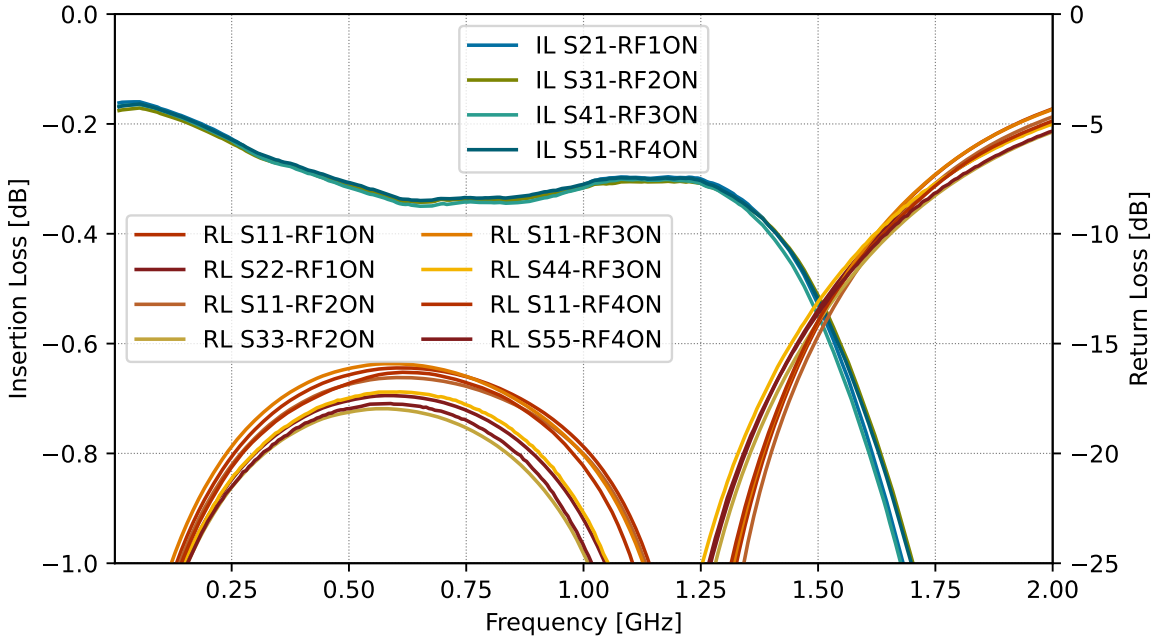

Insertion loss and Return loss, $\mathrm{RFC} - \mathrm{RFx}$.

©2024-2026 TagoreTech Inc.

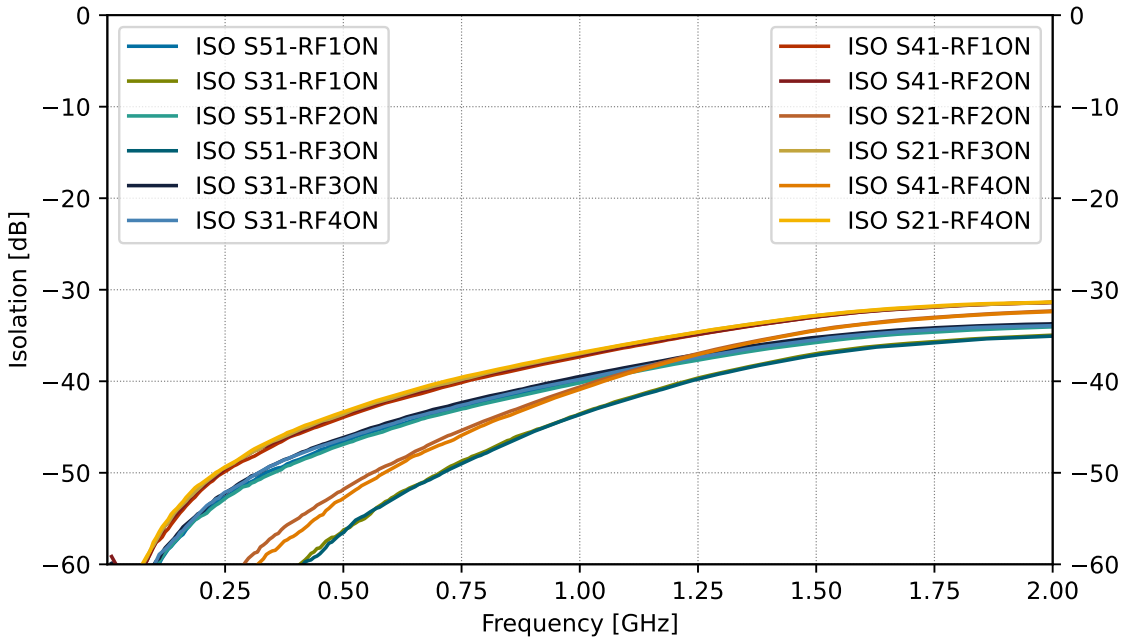

RFC – RFx isolation of non-active ports.

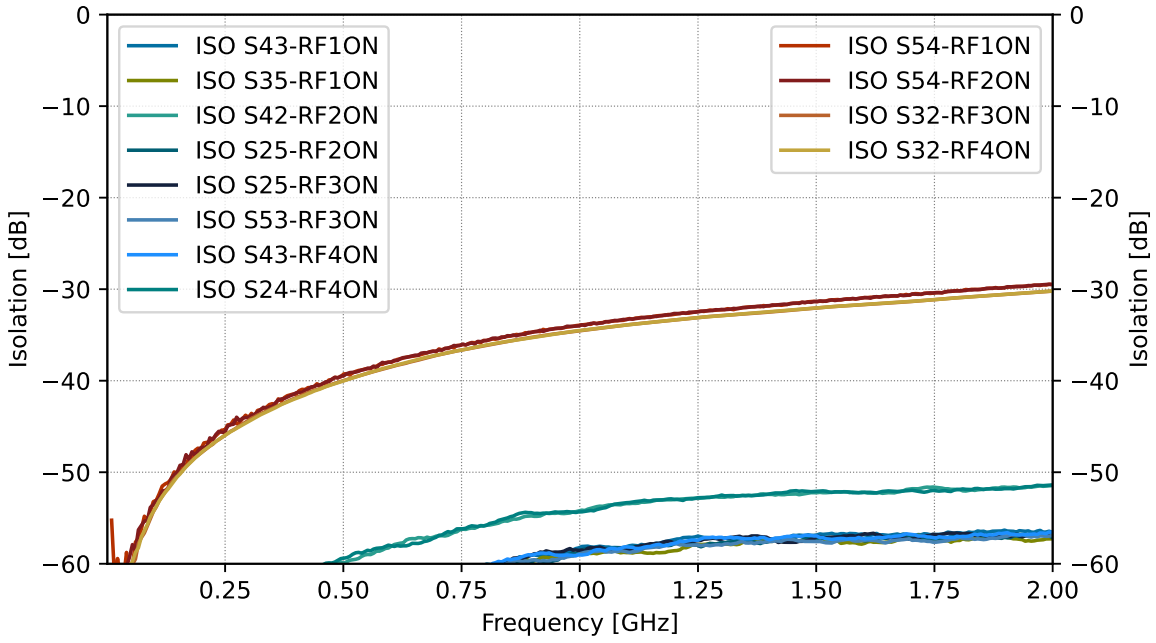

RFx – RFx isolation of non-active ports. Red/orange color curves are adjacent paths.

©2024-2026 TagoreTech Inc.

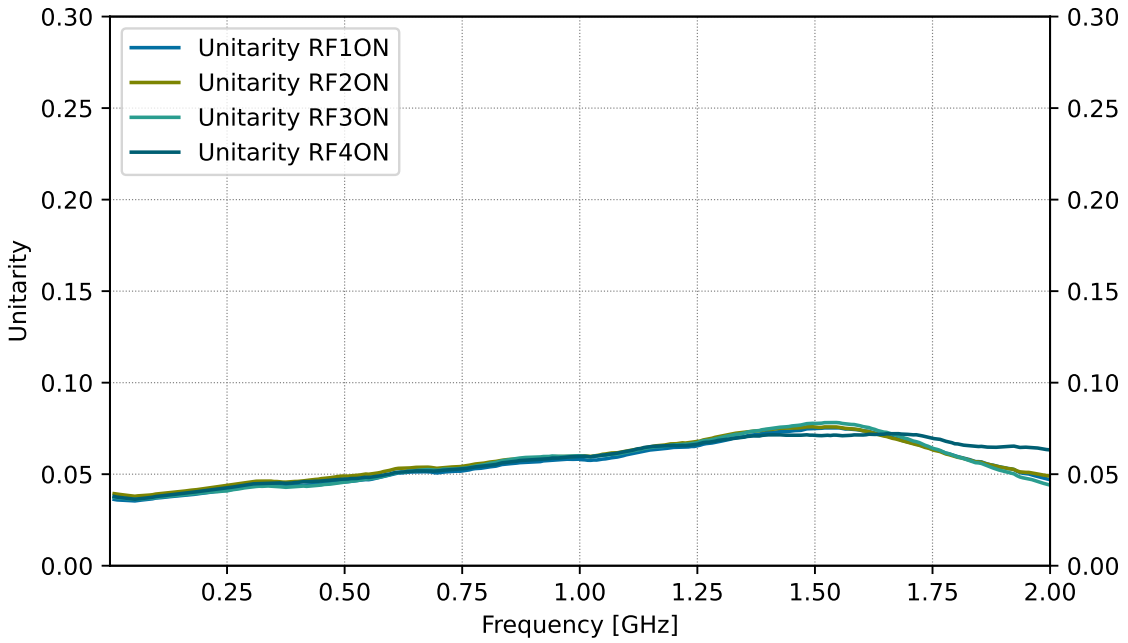

Unitarity, power absorption of the component, $1 - |S_{11}|^2 - |S_{21}|^2 - |S_{31}|^2 - |S_{41}|^2 - |S_{51}|^2$

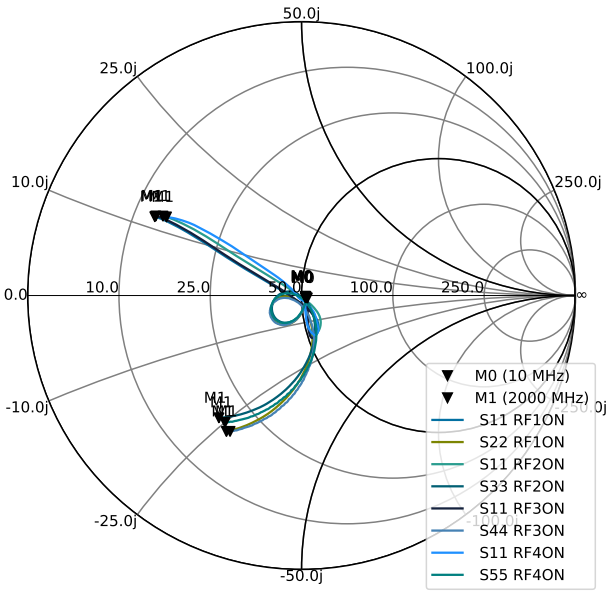

Matching of active port

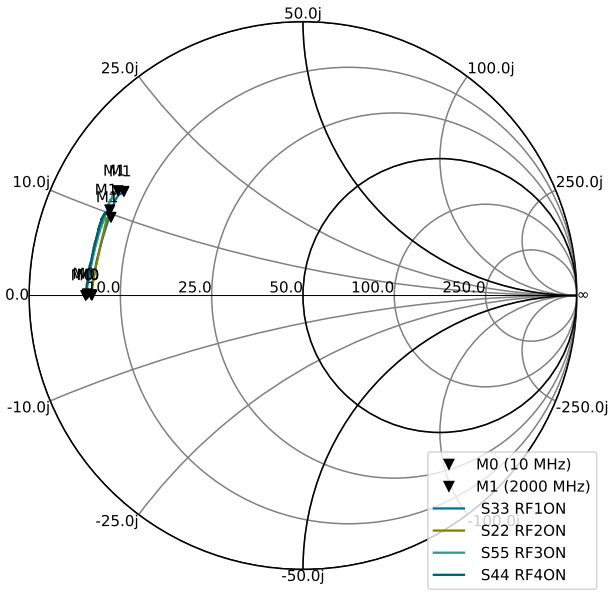

Termination impedance of non-active RFx.

©2024-2026 TagoreTech Inc.

Performance for IFF, 1030/1090 MHz (IDX03)

These measurements were obtained using the TS80430N EVB with a 1.0 pF shunt capacitor at the RFC port, placed 31.3 mm from the edge of the switch to the centre of the capacitor (Table 13). CPW losses have been de-embedded from the measurements, but the losses of the matching components are included. At the IFF frequencies 1030 MHz and 1090 MHz, insertion loss is 0.27 to 0.28 dB, return loss is better than 24.4 dB, $\mathrm{RFC} - \mathrm{RFx}$ isolation is better than 36.0 dB and $\mathrm{RFx} - \mathrm{RFx}$ isolation is better than 33.8 dB. These plots are based on EVB_IDX03, see s-parameter file.

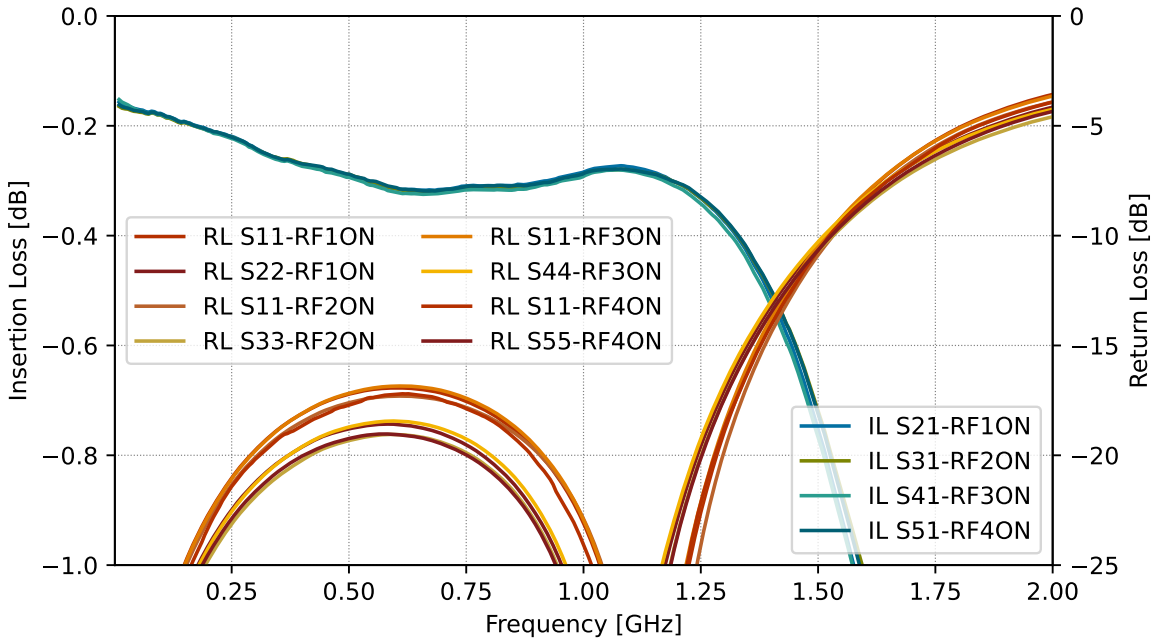

Insertion loss and Return loss, $\mathrm{RFC} - \mathrm{RFx}$.

©2024-2026 TagoreTech Inc.

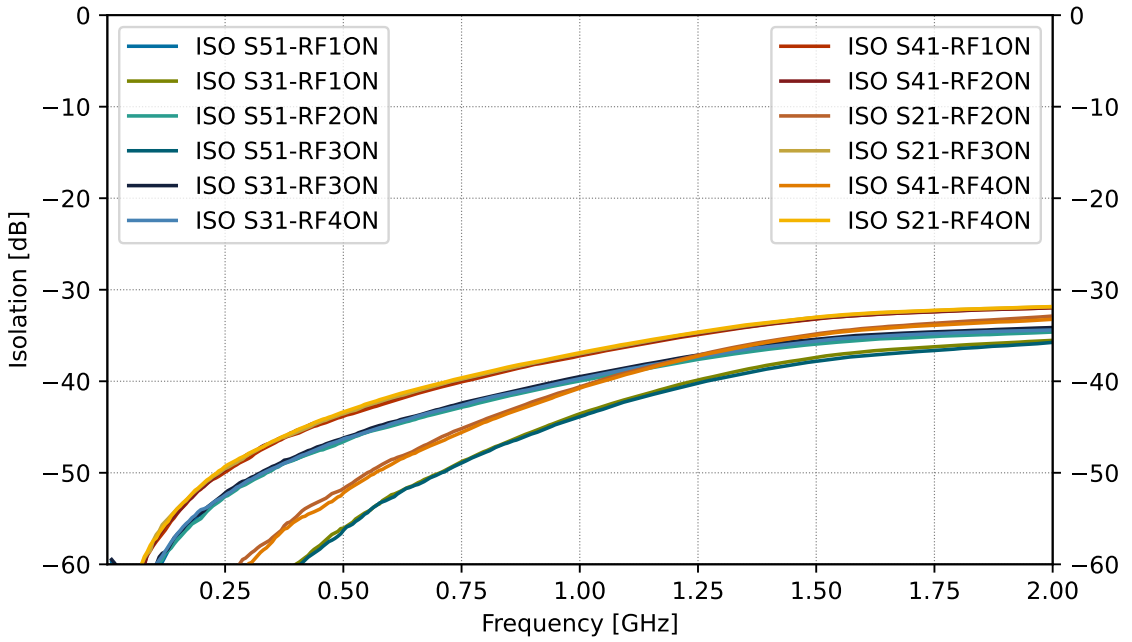

RFC – RFx isolation of non-active ports.

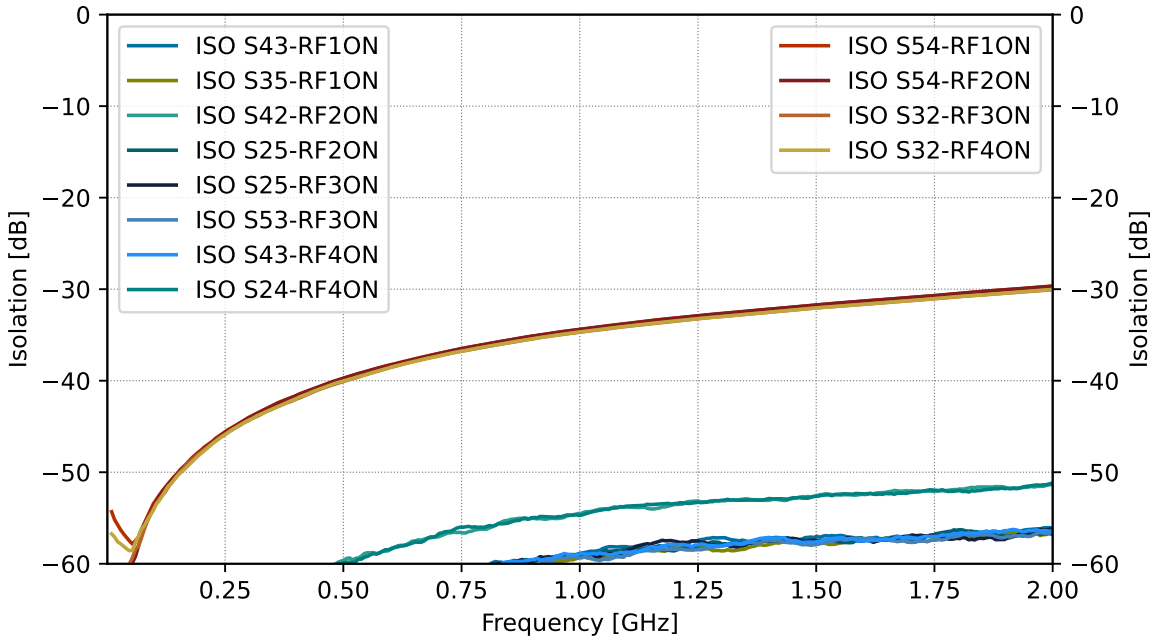

RFx – RFx isolation of non-active ports. Red/orange color curves are adjacent paths.

©2024-2026 TagoreTech Inc.

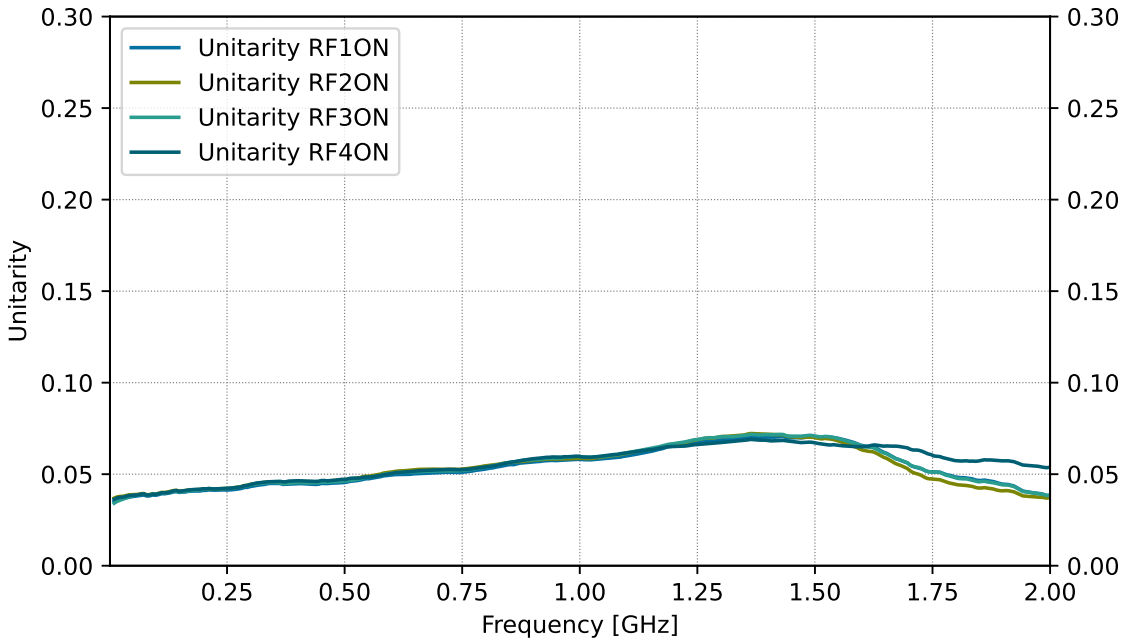

Unitarity, power absorption of the component, $1 - |S_{11}|^2 - |S_{21}|^2 - |S_{31}|^2 - |S_{41}|^2 - |S_{51}|^2$

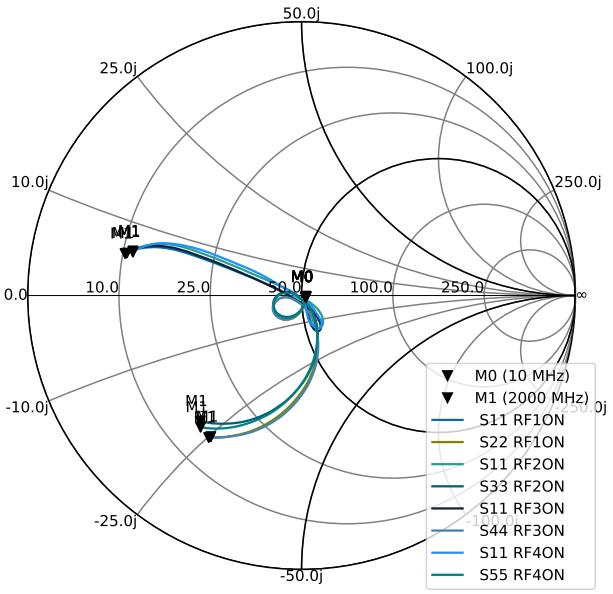

Matching of active port

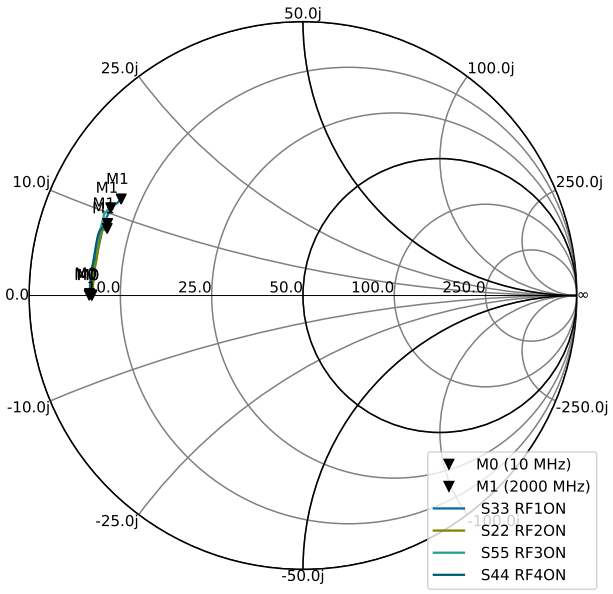

Termination impedance of non-active RFx.

©2024-2026 TagoreTech Inc.

Wideband performance upto 3.0 GHz (IDX04)

These measurements were obtained using the TS80430N EVB with shunt capacitors at all ports: 0.8 pF at RFC, 0.7 pF at RF1 and RF3, and 0.6 pF at RF2 and RF4 (Table 13). CPW losses have been de-embedded from the measurements, but the losses of the matching components are included. From 10 MHz to 3.0 GHz, insertion loss is 0.16 to 0.77 dB, return loss is better than 11.6 dB, $\mathrm{RFC} - \mathrm{RFx}$ isolation is better than 22.9 dB and $\mathrm{RFx} - \mathrm{RFx}$ isolation is better than 27.1 dB. Up to 2.0 GHz, insertion loss is below 0.66 dB and $\mathrm{RFC} - \mathrm{RFx}$ isolation is better than 29.5 dB. These plots are based on EVB_IDX04, see s-parameter file.

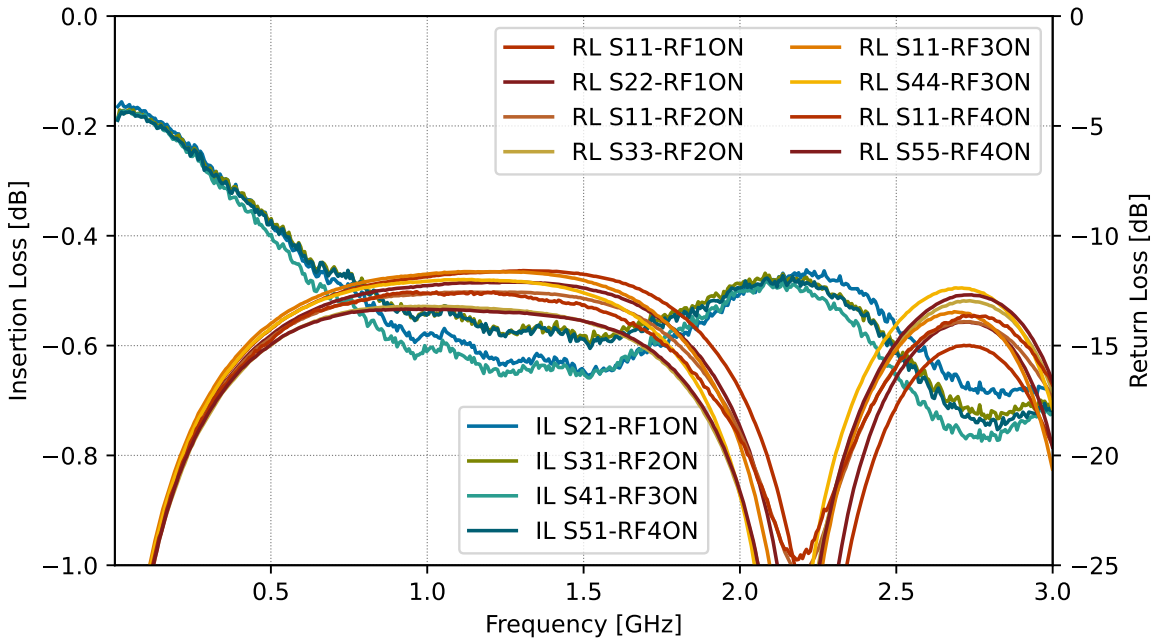

Insertion loss and Return loss, $\mathrm{RFC} - \mathrm{RFx}$.

©2024-2026 TagoreTech Inc.

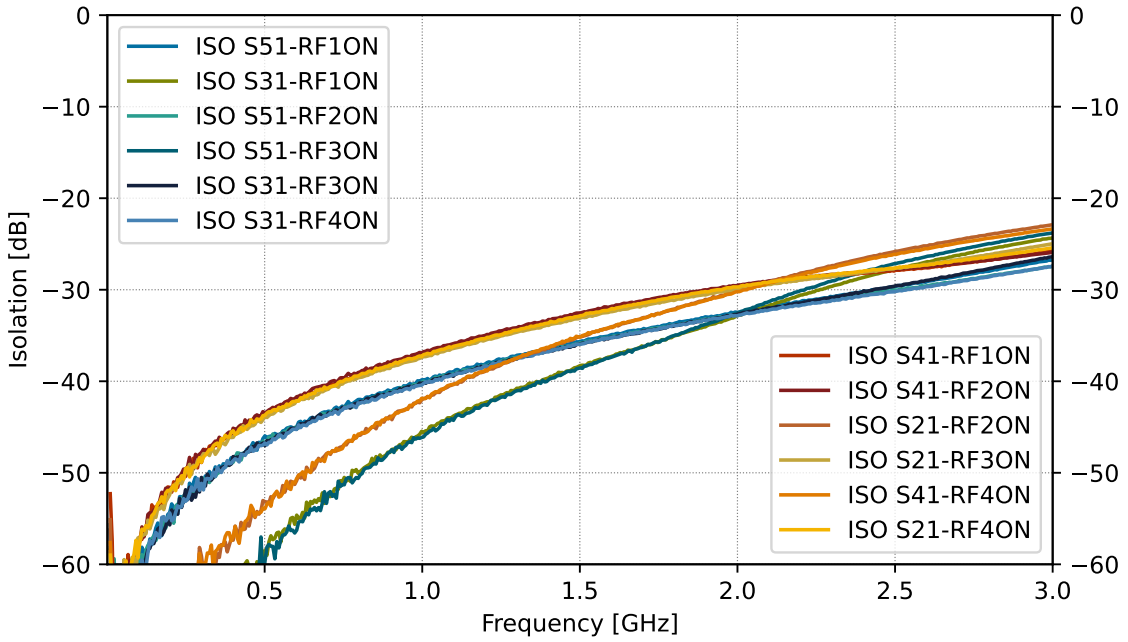

RFC – RFx isolation of non-active ports.

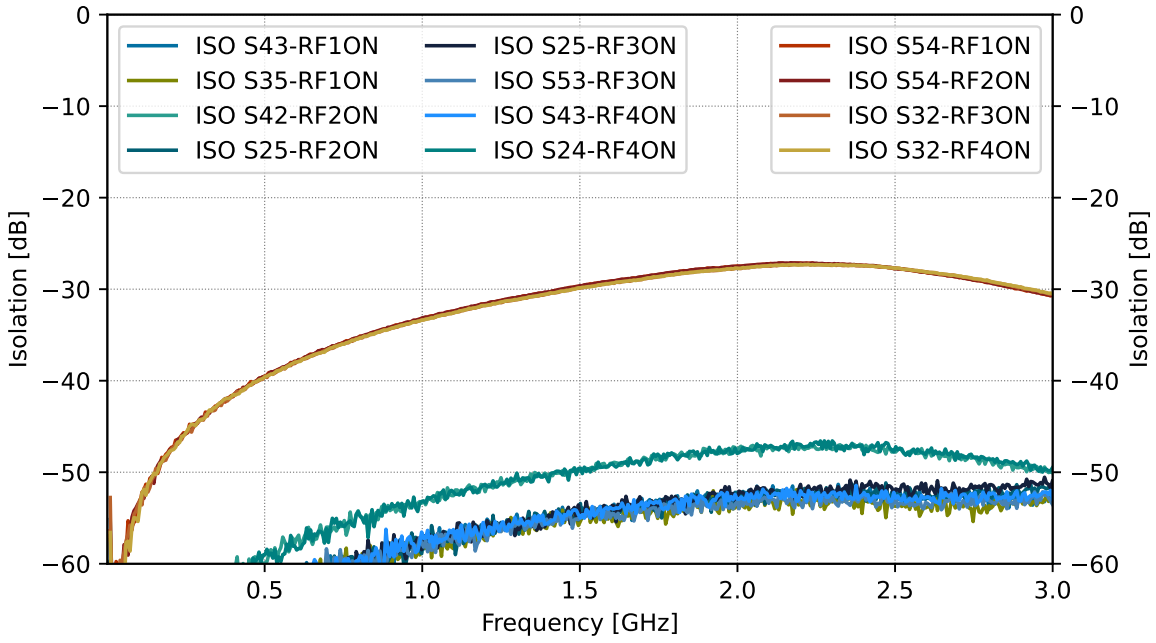

RFx – RFx isolation of non-active ports. Red/orange color curves are adjacent paths.

©2024-2026 TagoreTech Inc.

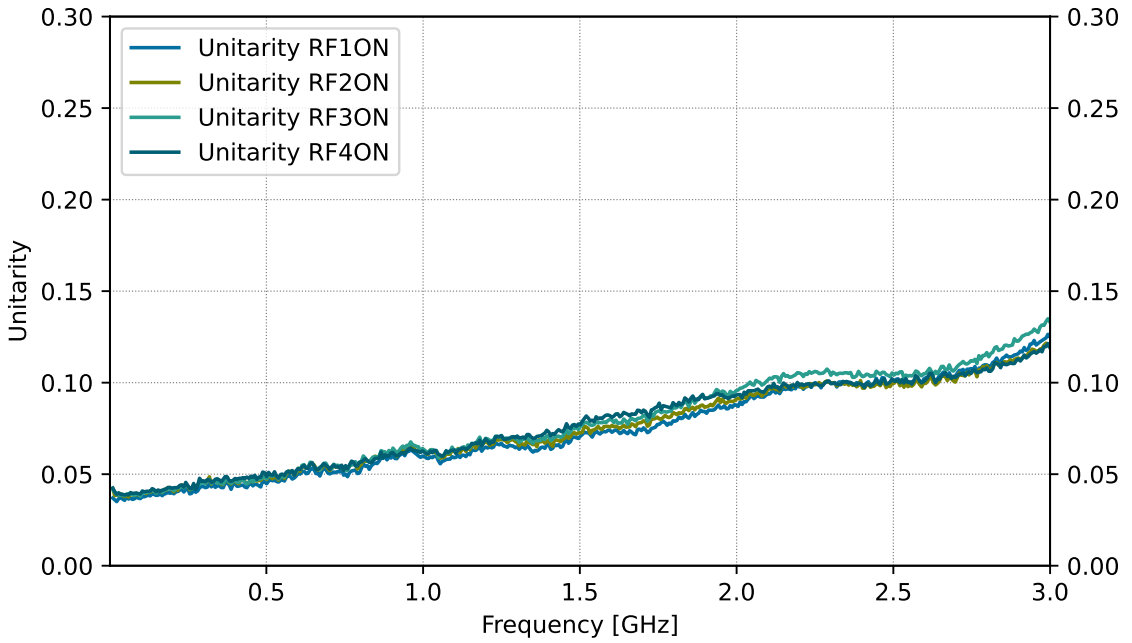

Unitarity, power absorption of the component, $1 - |S_{11}|^2 - |S_{21}|^2 - |S_{31}|^2 - |S_{41}|^2 - |S_{51}|^2$

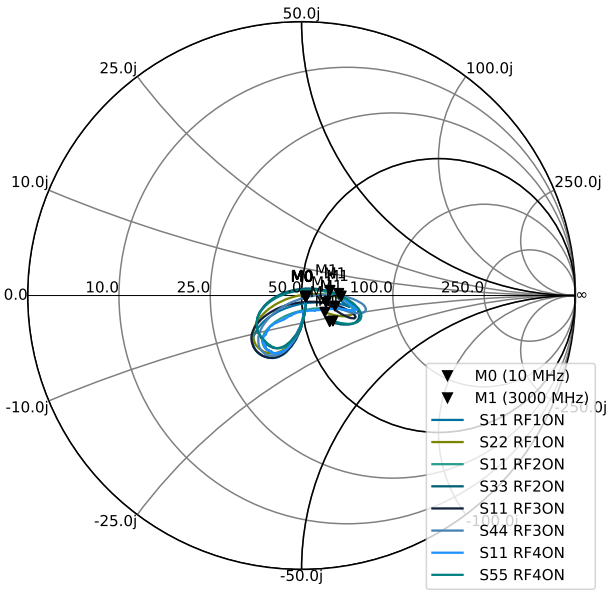

Matching of active port

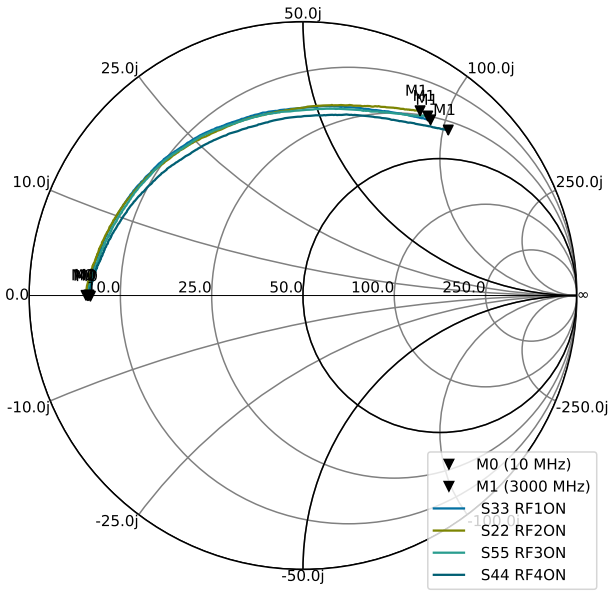

Termination impedance of non-active RFx.

©2024-2026 TagoreTech Inc.

Peak power handling with modulated signals

The TS80430N is rated for 50 dBm (100 W) average power (CW, 100% duty cycle) and 54 dBm (250 W) peak power, where the peak power rating is characterized with 10 μs pulses at 1% duty cycle. The two ratings describe two different physical limits of the switch. The average power rating is a thermal limit: the power dissipated in the switch, and therefore the junction temperature, is set by the average RF power. The peak power rating is a voltage limit: the instantaneous RF voltage across the OFF-state transistors must remain below their breakdown voltage. At 54 dBm in a 50 Ω system, the RF peak voltage is 158 V.

Gallium Nitride is particularly well suited for this task. The high breakdown field of GaN allows a switch to sustain high RF peak voltages, so that the peak power capability of the TS80430N exceeds its average power rating by a factor of 2.5 (4 dB). A switch whose peak capability is equal to its average rating must be derated by the full peak-to-average ratio of the signal, whereas the 4 dB peak headroom of the TS80430N covers most of the envelope peaks of single-carrier modulated signals.

Peak-to-average power ratio of QAM signals

Quadrature amplitude modulation (QAM), such as 16-QAM, 64-QAM or 256-QAM, does not have a constant envelope. The instantaneous envelope power fluctuates around the average power, and its peaks can be several dB above the average. The peaks are statistical in nature: the higher the level, the smaller the fraction of time for which the envelope exceeds it. This behavior is described by the complementary cumulative distribution function (CCDF) of the signal. The peak-to-average power ratio (PAPR) at a probability p is the level, relative to the average power, which the envelope exceeds for a fraction p of the time.

For single-carrier QAM, the PAPR is set by the constellation and by the pulse-shaping filter: a smaller root-raised-cosine (RRC) roll-off factor α gives a narrower spectrum but higher envelope peaks. For OFDM, the sum of many independently modulated subcarriers produces a nearly Gaussian signal, and the PAPR is practically independent of the QAM order of the subcarriers. OFDM therefore has a clearly higher PAPR than single-carrier QAM.

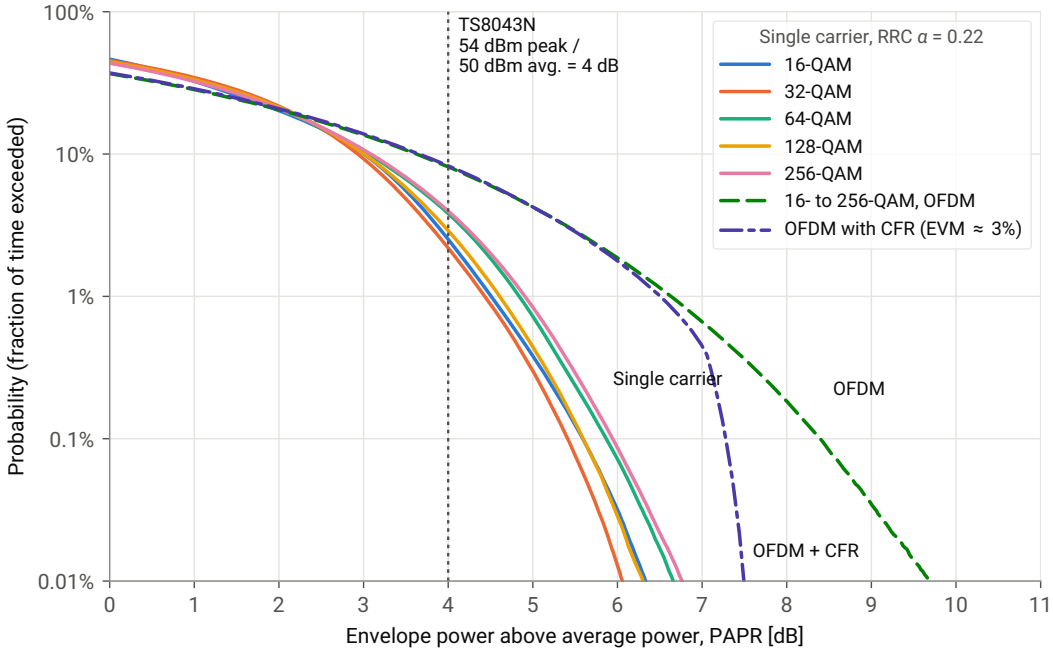

Figure 11: CCDF of the envelope power of QAM signals: fraction of time the envelope power exceeds the average power by the given PAPR. OFDM with CFR: iterative clipping and filtering, EVM $\approx$ 3%. The dotted line marks the 54 dBm / 50 dBm (4 dB) peak-to-average capability of the TS80430N.

©2024-2026 TagoreTech Inc.

Crest factor reduction for OFDM

Because the highest envelope peaks of an OFDM signal are rare, practical OFDM transmitters apply crest factor reduction (CFR) in the digital baseband before the power amplifier. A common method is iterative clipping and filtering: the envelope is limited to a threshold above its average, and the spectral regrowth caused by the clipping is filtered away, so that the transmitted spectrum and adjacent-channel leakage are preserved. The price is in-band distortion, expressed as an increase in error vector magnitude (EVM). The amount of CFR that can be applied is therefore set by the EVM budget of the modulation: 16-QAM tolerates considerably more distortion than 256-QAM. CFR removes only the rare, highest peaks; the PAPR at 1% to 10% probability is practically unchanged, while the PAPR at 0.1% is reduced by 0.4 dB to 1.9 dB for EVM contributions of 1.5% to 5%. Table 14 includes typical values for OFDM with CFR.

Average power capability with modulated signals

Typical PAPR values are listed in Table 14. Figure 11 shows the complete CCDF curves together with the 4 dB peak-to-average capability of the TS80430N. At the full 50 dBm average rating, the envelope of a single-carrier 16- to 256-QAM signal exceeds the 54 dBm peak level about 2% to 4% of the time, and an OFDM signal about 8% of the time, with or without CFR. This is more than the 1% duty cycle of the peak power rating, so the average power of modulated signals should be reduced below the CW rating. If the envelope peaks are required to stay within 54 dBm at the 1% probability level, the average power is limited to about 49.1 dBm to 49.6 dBm (81 W to 90 W) for single-carrier QAM and to about 47.4 dBm (54 W) for OFDM; at the 0.1% probability level the values given in the last column of the table apply. The envelope peaks of modulated signals last only a fraction of a symbol period, which is much shorter than the 10 μs pulses used for the peak power characterization.

©2024-2026 TagoreTech Inc.

Table 14: Peak-to-average power ratio (PAPR) of QAM signals, exceeded for the given fraction of time.

Modulation	PAPR [dB] at probability[2]			TS80430N max. avg. power [W][1]
	10%	1%	0.1%	
Single carrier, RRC pulse shaping, $\alpha = 0.22$				
16-QAM	3.0	4.5	5.6	69.2
32-QAM	2.9	4.4	5.4	72.4
64-QAM	3.1	4.8	5.8	66.1
128-QAM	3.0	4.6	5.6	69.2
256-QAM	3.1	4.9	5.9	64.6
Single carrier, RRC pulse shaping, $\alpha = 0.35$				
16-QAM	3.0	4.4	5.1	77.6
32-QAM	3.0	4.2	4.8	83.2
64-QAM	3.0	4.8	5.6	69.2
128-QAM	3.0	4.5	5.2	75.9
256-QAM	3.1	4.8	5.7	67.6
OFDM, 1024 subcarriers, no crest factor reduction				
16-QAM	3.6	6.6	8.4	36.3
32-QAM	3.6	6.6	8.4	36.3
64-QAM	3.6	6.6	8.4	36.3
128-QAM	3.6	6.6	8.4	36.3
256-QAM	3.6	6.6	8.4	36.3
OFDM, 1024 subcarriers, with crest factor reduction (clipping and filtering)[3]				
CFR for EVM ≈ 1.5%, e.g. 256-QAM	3.6	6.6	8.0	39.8
CFR for EVM ≈ 3%, e.g. 64/128-QAM	3.7	6.5	7.3	46.8
CFR for EVM ≈ 5%, e.g. 16/32-QAM	3.7	6.2	6.5	56.2

[1] Average power at which the envelope peaks at the 0.1% probability level remain within the 54 dBm (250 W) peak power rating, $P_{\text{avg}} = 250\,\text{W}/10^{\text{PAPR}_{0.1\%}/10}$, limited to the 50 dBm (100 W) average power rating. Indicative values; in a mismatched load (VSWR > 1) the RF peak voltage increases and further back-off may be required.

[2] PAPR values are calculated from the envelope power of ideal, unclipped signals. Measured values depend on the transmitter, its filtering, and any crest factor reduction applied.

[3] Iterative clipping and filtering, 4 iterations, clipping level 8.0 dB, 7.0 dB and 6.0 dB above the average power; EVM is the in-band distortion added by the CFR only. The PAPR after CFR is practically independent of the QAM order; the QAM orders given are examples of modulations whose EVM budget typically allows the stated CFR. Actual CFR performance depends on the implementation.

The QAM and OFDM information in this section is provided for information only. It is based on calculated signal statistics, has not been fully characterized on the TS80430N, and is not binding on TagoreTech; the ratings given in the Absolute Maximum Ratings and Electrical Specifications sections apply.

©2024-2026 TagoreTech Inc.

Power Derating

TS80430N has power handling derating below 10 MHz. The power derating table has been defined for a 50 Ω environment and is conservative; the low-frequency compression measurements below show that the part can handle higher power at low frequencies. Tagore is currently working on additional measurements and will update the power derating table in future. Customers are advised to carry out their own measurements when operating below 10 MHz.

Table 15: Power derating table

Start f	**Stop** f	**Max Power**	**Unit**
1 MHz	2 MHz	45	dBm
2 MHz	5 MHz	47	dBm
5 MHz	10 MHz	49	dBm
10 MHz	f_{max}	50	dBm

TS80430N continuous wave (CW) compression measurements at low frequencies are presented below. Measurements are presented as dots (•), the exponential model and its extrapolation as lines (–). At 1.75 MHz and 2 MHz, 0.1 dB compression is reached at 47.0 dBm and 47.5 dBm, respectively. At 5 MHz, no compression was measured up to 49 dBm. Values of the derating table take into account manufacturing tolerances and margins.

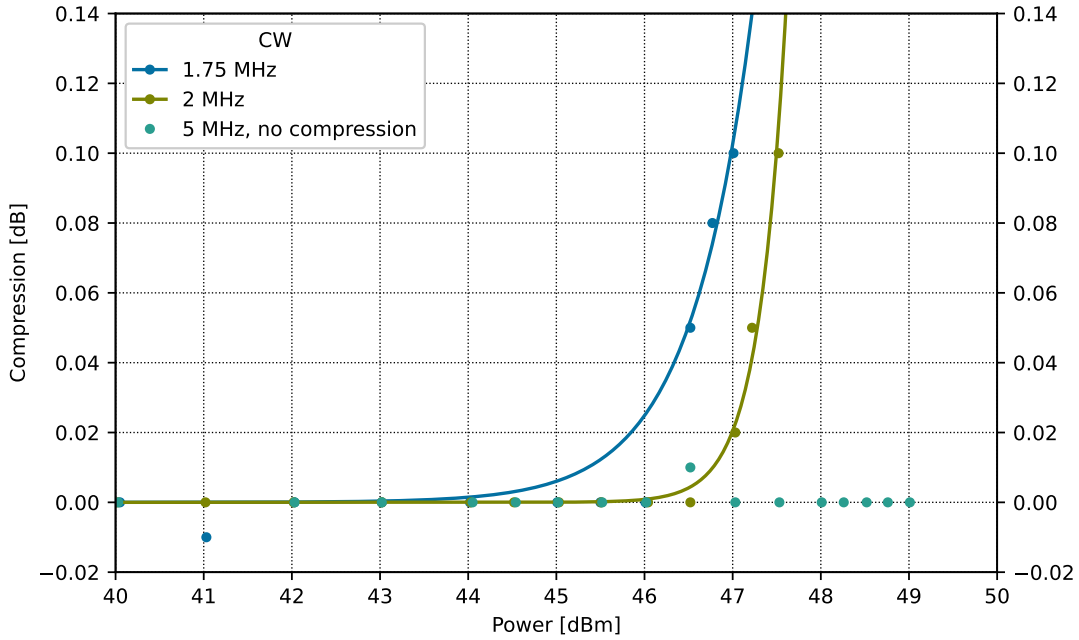

TS80430N CW compression measurement at 1.75 MHz, 2 MHz and 5 MHz.

©2024-2026 TagoreTech Inc.

Device Package information

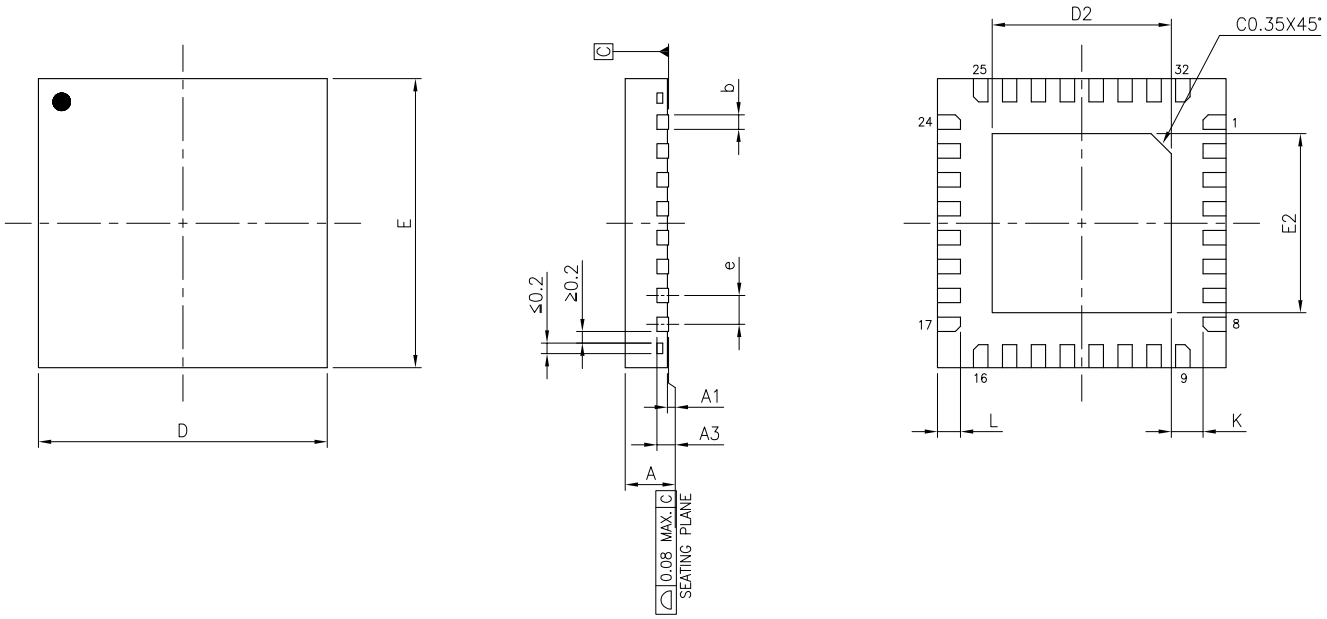

Figure 12: 32-pin QFN 5.0 x 5.0 x 0.75 mm^3 package drawing.

Please refer to application notes TN-001 PCB Design guideline and TN-002 Solder Rework at TagoreTech web page for PCB and soldering guidelines.

Table 16: Device Package Dimensions

Dimension	Value [mm]	Tolerance [mm]	Dimension	Value [mm]	Tolerance [mm]
A	0.75	±0.05	e	0.50 BSC	±0.05
A1	0.02	+0.03/-0.02	E	5.00 BSC	±0.05
A3	0.203	REF	E2	3.20	±0.05
b	0.25	+0.05/-0.07			
D	5.00 BSC	±0.05	L	0.40	±0.05
D2	3.20	±0.05	K	0.50	±0.05

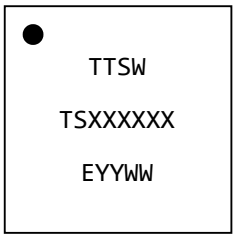

●	Pin 1 indicator
TTSW	TagoreTech SWitch
TSXXXXXX	Part number (8 digits max)
E	Fixed letter before date code
YY	Last two digits of assembly year
WW	Assembly work week

Figure 13: Part marking specification.

©2024-2026 TagoreTech Inc.

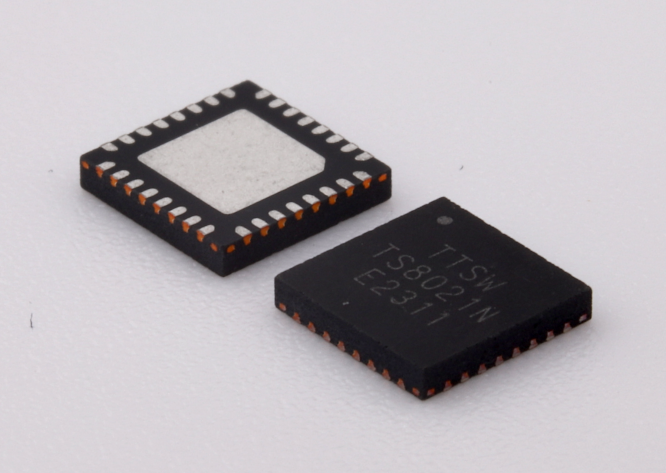

Figure 14: TS80430N photo, top and bottom side.

©2024-2026 TagoreTech Inc.

PCB Land Design

Notes:

- 4-layer PCB is recommended.
- Via diameter is recommended to be 0.3mm to prevent solder wicking inside the vias.
- Thermal vias shall only be placed on the center pad.
- The maximum via number for the center pad is 11(X)×11(Y)=121.

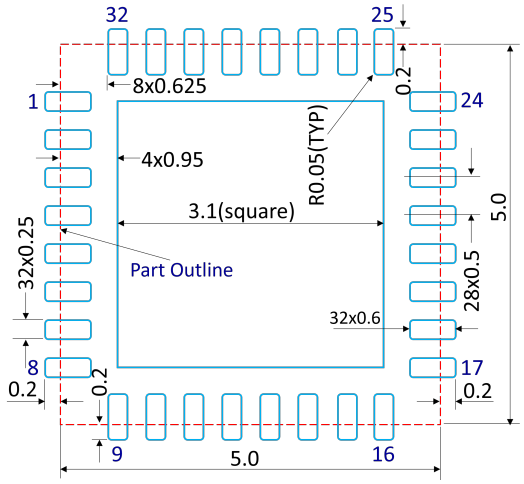

Figure 15: PCB land pattern, dimensions in [mm].

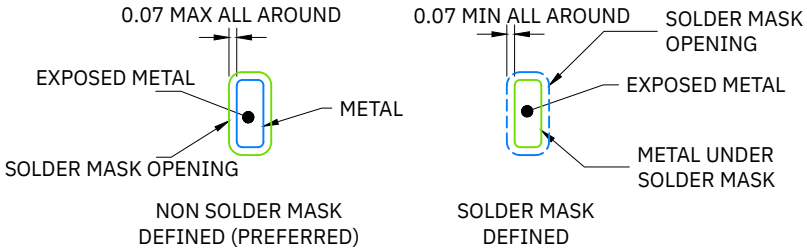

Figure 16: Solder mask opening, dimensions in [mm].

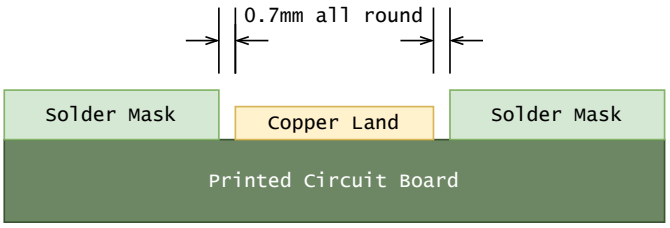

Figure 17: Preferred solder mask opening, side view, dimensions in [mm].

©2024-2026 TagoreTech Inc.

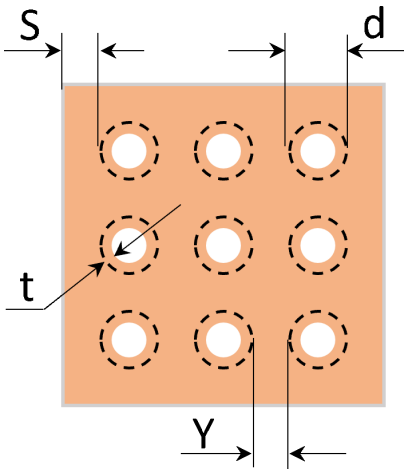

Figure 18: Thermal Via Pattern, Recommended Values: S≥0.15mm; Y≥0.20mm; d=0.2mm; Plating Thickness t=25μm or 50μm.

©2024-2026 TagoreTech Inc.

PCB Stencil Design

Notes:

- Laser-cut, stainless steel stencil is recommended with electro-polished trapezoidal walls to improve the paste release.
- Stencil thickness is recommended to be 125μm.

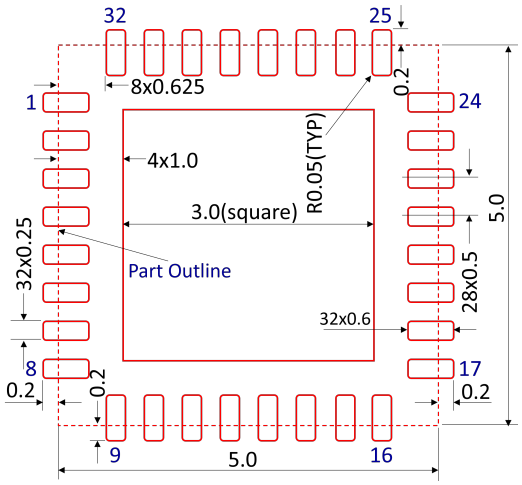

Figure 19: Stencil Openings, dimensions in [mm].

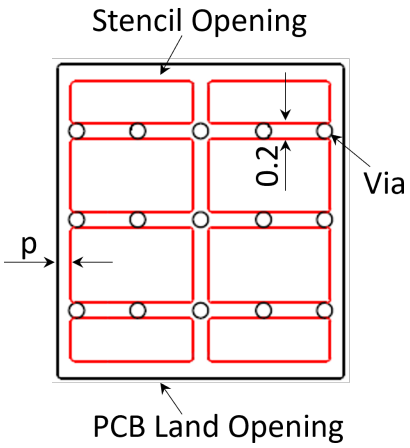

Figure 20: Stencil Openings Shall not Cover Via Areas If Possible, dimensions in [mm].

©2024-2026 TagoreTech Inc.

Tape and Reel Information

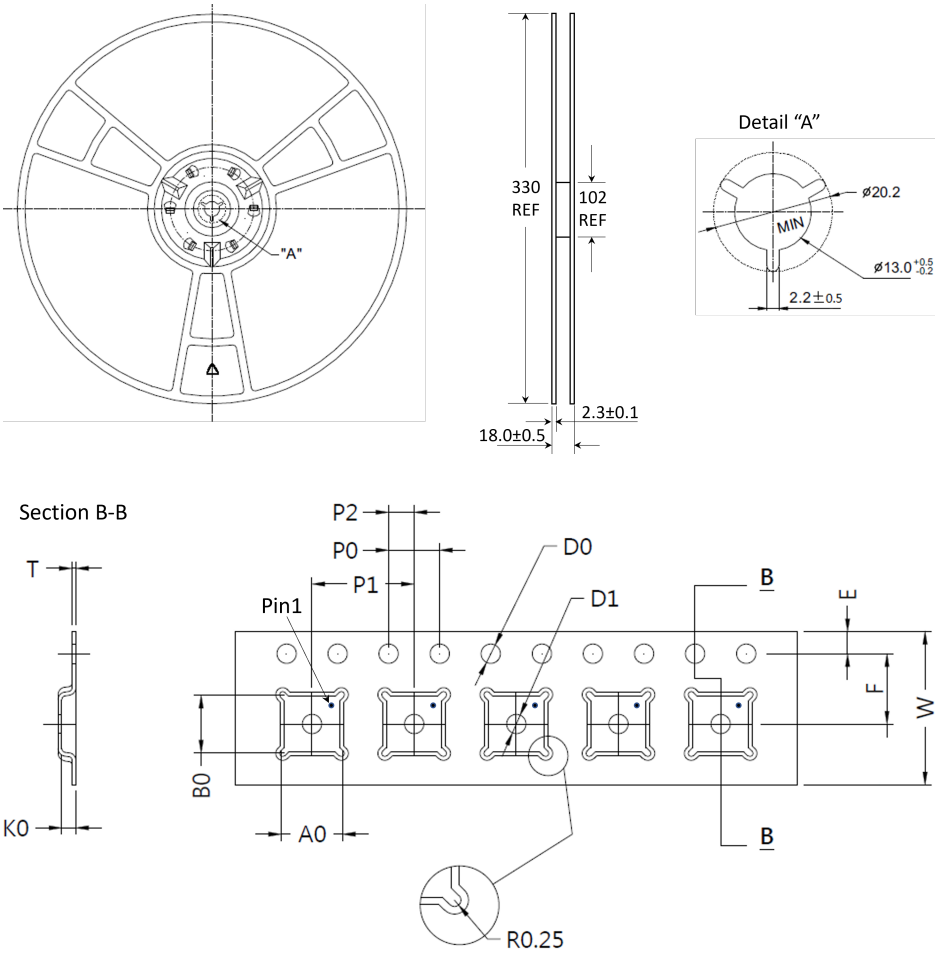

A0[mm]	B0[mm]	D0[mm]	D1[mm]	E[mm]	F[mm]	K0[mm]	P0[mm]	P1[mm]	P2[mm]	T[mm]	W[mm]
5.25	5.25	1.50	1.50	1.75	5.50	1.10	4.00	8.00	2.00	0.30	12.00

©2024-2026 TagoreTech Inc.

Glossary

IL	Insertion loss
ISO	Isolation
RL	Return loss
VSWR	Voltage Standing Wave Ratio
RFC	RF Common port, sometimes referred as ANT
RFx	RF Port number x
Unitarity	Describes power absorption of the component, $1-\|S_{11}\|^2-\|S_{21}\|^2-\|S_{31}\|^2-\|S_{41}\|^2-\|S_{51}\|^2$
CP	Charge pump
CPW	Coplanar waveguide
IFF	Identification friend or foe, 1030 MHz and 1090 MHz
Link 16	Tactical data link, 969 MHz to 1206 MHz
CCDF	Complementary cumulative distribution function
CFR	Crest factor reduction
EVM	Error vector magnitude
OFDM	Orthogonal frequency-division multiplexing
PAPR	Peak-to-average power ratio
QAM	Quadrature amplitude modulation
RRC	Root-raised-cosine (pulse-shaping filter)

Changelog

©2024-2026 TagoreTech Inc.

Table 17: Changelog

Date	Revision	Notes
09/19/2026	3.00	First publication of new format.
10/25/2026	3.10	Peak power handling with modulated signals added: PAPR of QAM and OFDM signals, crest factor reduction, CCDF plot. QR code link to the latest datasheet, links to application notes TN-001/TN-002, distributor table reformatted, glossary extended. V_{CP} absolute maximum rating -20 V added, spelling unified to derating, V_{DD} to V_{CP} delay 50 μs, C_{VCP} 1 nF, RF peak voltage 160 V, headings corrected. Typical characteristics of the matching examples IDX01 to IDX04 added (1300 to 1600 MHz, Link 16, IFF, wideband to 3.0 GHz), SP4T schematic of the matched EVB and matching component table, content of the S-parameter repository updated, comparison plots removed. Low-frequency CW compression plot added to Power Derating. Maximum frequency defined as 3.0 GHz; insertion loss, isolation and return loss specifications and front-page values from the measured S-parameters (IDX00 to IDX04). SP4T in title and keywords, unmatched operation up to 1.6 GHz, switch-state captions corrected, P_{maxCW} 50 dBm, power derating text updated. TS80430N: internal charge pump disabled, external -18 V supply on V_{CP} required; description, pin definition, theory of operation, absolute maximum ratings and electrical specification (V_{CP}, I_{CP}, noise, pulse repetition rate) updated accordingly.

©2024-2026 TagoreTech Inc.

Legal Information

Published by

TagoreTech Inc.
601 Campus Drive, Suite B3
Arlington Heights, IL 60004, USA

©2024-2026 All Rights Reserved

TagoreTech is a fabless US semiconductor company specializing in GaN RF solutions: high-power RF switches in unique GaN-on-Si technology, RF power amplifiers in GaN-on-SiC, and reconfigurable front-end solutions — such as tunable power amplifiers and antenna tuning — that combine the two. TagoreTech serves defense, radar, datalink, 5G infrastructure, and public safety markets.

Legal Disclaimer

The information provided in this document is believed to be accurate and reliable, but shall in no event be regarded as a guarantee of conditions or characteristics. TagoreTech makes no warranties, express or implied, including without limitation any implied warranty of merchantability or fitness for a particular purpose. TagoreTech assumes no responsibility for the consequences of the use of this information, nor for any infringement of patents or other rights of third parties which may result from its use. No license is granted by implication or otherwise under any patent or patent rights of TagoreTech. Customers are responsible for validating the suitability of TagoreTech products in their own applications and for compliance with all applicable laws and regulations, including export control requirements. Specifications are subject to change without notice. Errors and omissions excepted.

Use in critical applications. TagoreTech products are not designed or authorized for use in life-support devices or systems, safety-critical applications, or applications where failure could reasonably be expected to cause personal injury, unless expressly agreed in writing by an authorized representative of TagoreTech. Any such use is at the customer's own risk.

Sales Contact

For further information on technology, delivery terms, conditions, and prices, please contact TagoreTech: support@tagoretech.com or contact our distributors or representatives as listed at TagoreTech website. Please click the blue links.

Buy TS80430N directly

TS80430N is available through TagoreTech distributors and representatives.

DigiKey
Digikey TS80430N
Digikey TS80430N-EVB

RichardsonRFPD An Arrow Company
RFPD TS80430N
RFPD TS80430N-EVB

TS80430N Product Information

Please visit TS80430N product page for further information TS80430N Product Page

Latest version of TS80430N datasheet is available for download: TS80430N Datasheet

S-parameters of all presented EVB configurations are available: TS80430N S-parameters

TagoreTech Inc. Product Brochure and datasheets

Tagore Product Brochure and links to all available datasheets is available for download:
TagoreTech Product Brochure

Scan for the latest datasheet