SPDT 100 W Peak Asymmetric GaN RF Switch 500 MHz to 8.5 GHz

Features

- Frequency Range 500 MHz to 8.5 GHz
- Low insertion loss (TX/RX): 0.4 dB/0.5 dB @ 3.0 GHz
- High isolation (RX path): 38 dB @ 3.0 GHz
- High peak power handling capability, 50 dBm peak $P_{0.1\text{dB}}$ on the TX path
- 40 dBm CW hot switching on ANT port
- 42 dBm average, 10 dB PAPR LTE single event ($<$10 s)
- No external DC blocking capacitors on RF lines
- All RF ports OFF state
- Versatile 2.6 V – 5.5 V power supply

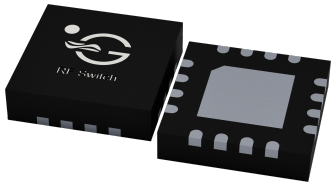

Figure 1: TS8329K in 3.0 x 3.0 mm^2 QFN 16-pin package.

Applications

- 4G, 5G systems
- RX protection
- Cellular infrastructure
- Small cells
- LTE relays and microcells
- Radar

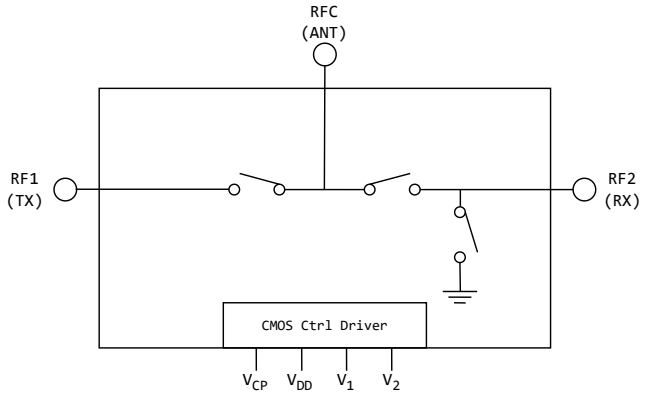

Figure 2: TS8329K functional diagram

General Description

The TS8329K is an asymmetrical reflective Single Pole Double Throw (SPDT) switch designed for broadband, high peak power switching applications. Its broadband behavior from 500 MHz to 8.5 GHz makes the TS8329K an excellent switch for all applications requiring low insertion loss, high isolation, and high linearity within a small package size.

The TS8329K is housed in a compact 3.0$\times$3.0 mm^2 16-lead Quad Flat No-lead (QFN) plastic package.

RoHS

RoHS10/REACH/Halogen free

Contents

Features 1
Applications 1
General Description 1
Ordering information 3
Pin Assignment 4
Absolute Maximum Ratings 5
Electrical Specifications 6
Switching time definition . . . 8
Switch Control table 9
Theory of Operation 10
Feeding external V_{CP} voltage of -18 V . . . 10
Application Information 10
Schematics and Evaluation Board 10
S-parameters . . . 13
Typical characteristics 14
Performance up to 8.5 GHz, unmatched (IDX00) . . . 14
Earlier measurements, including RX path with shunt capacitor matching . . . 17
Compression measurement . . . 19
Peak power handling with modulated signals . . . 21
Peak-to-average power ratio of QAM signals . . . 21
Crest factor reduction for OFDM . . . 22
Average power capability with modulated signals . . . 22
Device Package information 24
PCB Land Design 26
PCB Stencil Design 28
Tape and Reel Information 29
Glossary 30
Changelog . . . 30
Legal Information 32
Published by . . . 32
Legal Disclaimer . . . 32
Sales Contact . . . 32
Buy TS8329K directly . . . 32
TS8329K Product information . . . 32
TagoreTech Inc. Product Brochure and datasheets . . . 32

©2024-2026 TagoreTech Inc.

Ordering information

Table 1: Ordering Information

Device Part Number	Package Type	Notes
TS8329K	16 Pin 3.0x3.0x0.75 mm^3 QFN	Core part number
TS8329K-EVB	Evaluation Board	Unmatched (IDX00)
TS8329KMTRPBF[1]	330 mm reel, 3 000 pcs	Full reel

[1] MTRPBF - M: Manufacturing, TR: Tape and Reel, and PBF: lead free.

Table 2: Tape and Reel Information

Form	Quantity	Reel Diameter	Reel Width
Tape and Reel	3 000	13” (330mm)	18mm

©2024-2026 TagoreTech Inc.

Pin Assignment

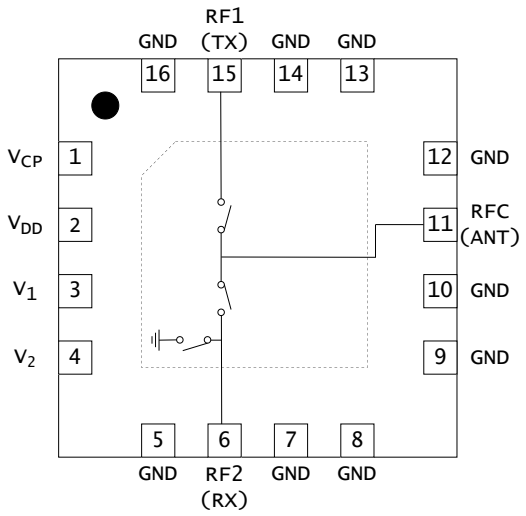

Figure 3: TS8329K pin assignment [top view]

Table 3: Pin Definition

Pin Number	Pin Name	Description
1	V_{CP}	Internal charge pump voltage output, connect a 1 nF capacitor to GND on this pin to improve switching time.
2	V_{DD}	DC Power Supply
3	V_1	Switch control input 1
4	V_2	Switch control input 2
5	GND	Ground
6	RF2(RX)	RF2 (RX) port
7,8,9,10,12,13,14,16	GND	Connect to ground[2]
11	RFC(ANT)	RF Common (Antenna) port
15	RF1(TX)	RF1 (TX) port
17 [1]	GND	Ground thermal pad, please connect to GND

[1] The backside ground (thermal) pad of the package must be grounded directly to the ground plane of PCB with multiple vias, and adequate heat sinking must be used to ensure proper operation and thermal management.
[2] These pins are NC pins inside the package. To avoid floating pins around RF lines, we request these to be connected to ground.

©2024-2026 TagoreTech Inc.

Absolute Maximum Ratings

Table 4: Absolute Maximum Ratings $T_A = +25$°C unless otherwise specified[1].

Parameter	Symbol	Value	Unit
Electrical Ratings			
Power Supply Voltage	V_{DD}	5.5	V
External bias voltage on V_{CP} pin	V_{CP}	-20	V
Storage Temperature Range	T_{st}	−55 – 125	°C
Operating Temperature Range	T_{op}	−40 – 85	°C
Maximum Junction Temperature	T_j	+140	°C
Maximum RF CW input power, 800 MHz, T_J=+85°C	$TX-ANT$	42	dBm
Maximum RF CW input power, 800 MHz, T_J=+105°C	$TX-ANT$	41	dBm
Maximum RF peak input power, 1% duty cycle, 10μs pulse[2]	$TX-ANT$	50	dBm
Maximum RF peak voltage[3]	TX/ANT	100	V
Thermal Ratings			
Thermal Resistance (junction-to-case) – Bottom side	$R_{\theta jc}$	25	°C/W
Thermal Resistance (junction-to-top)	$R_{\theta jt}$	36	°C/W
Soldering Temperature	T_{solder}	+260	°C
ESD Ratings			
Human Body Model (HBM)	Level 1B	500 – $<$1000	V
Charged Device Model (CDM)	Level C3	$\geq$1000	V
Moisture Rating			
Moisture Sensitivity Level[4]	MSL	1	

[1] Maximum ratings are absolute ratings. Exposure to absolute maximum rating conditions for extended periods may affect device reliability and can cause permanent damage to the device. Exceeding one or a combination of the absolute maximum ratings may cause permanent and irreversible damage to the device and/or to surrounding circuit. Functional operation of the device is not implied in any conditions above those indicated in the Electrical Specifications section.

[2] Test frequency 800 MHz.

[3] RF peak voltage of 50 dBm (100 W) in a 50 Ω system, $V_{peak} = \sqrt{2 \cdot P \cdot 50\,\Omega}$.

[4] Tagore recommends to store parts in moisture barrier bag to preserve solderability.

©2024-2026 TagoreTech Inc.

Electrical Specifications

Table 5: Electrical Specifications $T_A = +25°C; V_{DD} = +3.3V; 50\Omega$ Source/Load.

Parameter	Condition	Minimum	Typical	Maximum	Unit
Operating frequency[1]	f	500		8500	MHz
Insertion loss, TX	800 MHz		0.25	0.40	dB
$ANT - TX$	1.95 GHz		0.33	0.45	dB
	2.6 GHz		0.38	0.55	dB
	3.8 GHz		0.41		dB
	5.0 GHz		0.48		dB
Insertion loss, RX	800 MHz		0.30	0.65	dB
$ANT - RX$	1.95 GHz		0.40	0.70	dB
	2.6 GHz		0.46	0.75	dB
	3.8 GHz		0.54		dB
	5.0 GHz		0.73		dB
Isolation	800 MHz	39	51		dB
$ANT - TX$	1.95 GHz	30	37		dB
	2.6 GHz	27	32		dB
	3.8 GHz		26		dB
	5.0 GHz		21		dB
Isolation	800 MHz	52	61		dB
$ANT - RX$	1.95 GHz	42	46		dB
	2.6 GHz	37	41		dB
	3.8 GHz		35		dB
	5.0 GHz		32		dB
Return Loss	800 MHz		-27		dB
$ANT - TX, RX$	1.95 GHz		-21		dB
	2.6 GHz		-20		dB
	3.8 GHz		-17		dB
	5.0 GHz		-12		dB
Isolation @ Peak Power	P_{peak}=49.2 dBm, ISO RX @3.8 GHz		35		dB

[1] No external DC blocking capacitors are required on RF pins unless DC voltage is applied on a RF pin. Above 6 GHz a shunt capacitor at the RX port is recommended, see Schematics and Evaluation Board.

©2024-2026 TagoreTech Inc.

Table 6: Electrical Specifications $T_A = +25°C; V_{DD} = +3.3V; 50\Omega$ Source/Load.

Parameter	Condition	Minimum	Typical	Maximum	Unit
Operating frequency	f	500		8500	MHz
Harmonic Distortion					
H_2	800MHz, P_{in} =35dBm		-75		dBc
H_3	800MHz, P_{in} =35dBm		-80		dBc
IIP3	800MHz		71		dBm
Power and Compression point					
P_{maxCW} TX	Max RF CW Power		41		dBm
$P_{maxpeak}$ TX[3]	Max RF Peak Power		49		dBm
$P_{0.1dB}$ TX[2]	700 MHz – 6 GHz, CW	42	44		dBm
$P_{peak0.1dB}$ TX[3]	700 MHz – 6 GHz, pulsed power	49.2	50		dBm
$P_{peak0.1dB}$ TX[3]	42 dBm avg, 10 dB PAPR LTE signal (<10 s)		52		dBm
$P_{0.1dB}$ RX[2]	700 MHz – 6 GHz, CW	39	41		dBm
$P_{peak0.1dB}$ RX[3]	800 MHz, pulsed power		43.5		dBm
Switching Time					
t_{SW}, C_{VCP} = 1nF	50% ctrl to 10/90% settled RF value		0.4		μs
Power Supply, DC					
Control voltage	Power Supply V_{DD}	2.6	3.3	5.5	V
	All control pins high[4], V_{ih}	1.0	3.3	5.25	V
	All control pins low, V_{il}	-0.3		0.5	V
Control current	All control pins high, I_{ih}			7.5	μA
	All control pins low, I_{il}		0		μA
Current consumption	I_{DD}, active mode (V_{DD} on)		160	200	μA

[2] $P_{0.1dB}$ is a figure of merit. Please do not exceed Absolute Maximum ratings.
[3] Peak power was verified with 1% duty cycle and 10 μs pulse width.
[4] Control voltage V_{ih} cannot be higher than V_{DD} (to avoid forward biasing of ESD diode)

©2024-2026 TagoreTech Inc.

Switching time definition

Example of the definition by using 10 W/40 dBm signal. We apply 10W signal to RF port, stabilized with isolator. Isolator is needed as our switch shows to RF port approximately 4Ω impedance. Let's assume that the switch insertion loss is 0.3 dB. Therefore 90% of the RF signal is 39.55 dBm and 10% of the RF signal is 1W/30dBm. We need to take into account 0.3dB insertion loss, therefore numbers are 39.25 dBm and 29.7 dBm respectively. We change the control from low to high and our time reference point is when our control signal exceeds lower threshold value $\mathrm{V_{ihlow}}$. In certain measurements when control signal rise time is significantly shorter than RF output signal, we approximate start of the clock with 50% point of the control signal.

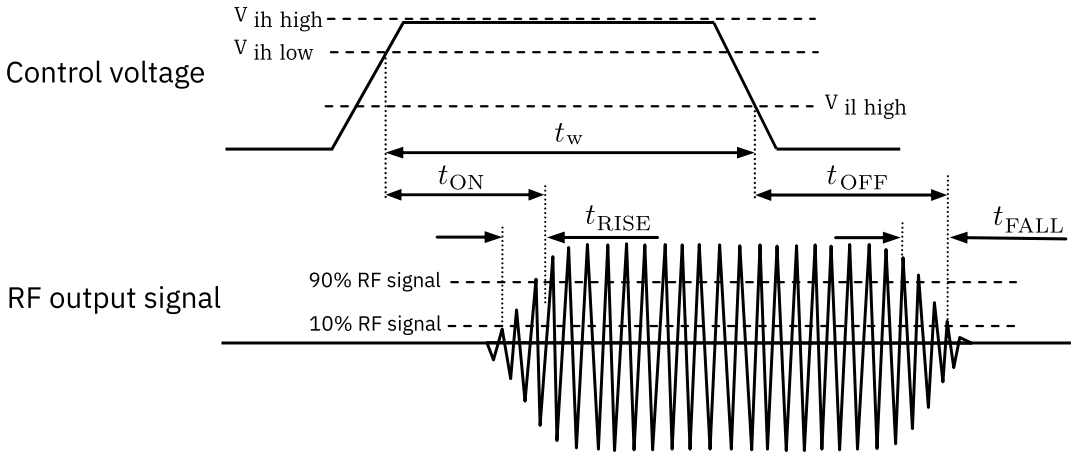

Figure 4: Switching time definition, t_{ON}, t_{OFF}, t_{RISE}, t_{FALL}. Minimum pulse width t_{w}.

Our component uses integrated charge pump. Maximum pulse repetition rate defines what is maximum frequency for switching events. Please do not exceed given maximum frequency. By feeding external -18 V to $\mathrm{V_{CP}}$, one can improve maximum pulse repetition rate f_{PRR}. Feeding external -18 V to $\mathrm{V_{CP}}$, one can drive switch at least to 20 kHz f_{PRR}. Expect current consumption of 10 mA of -18 V.

©2024-2026 TagoreTech Inc.

Switch Control table

Table 7: Switch Control Table

V_{DD}[1]	V_2	V_1	**Switch state**
1	0	0	$RFC(ANT) - RF2(RX)$ ON[2]
1	0	1	$RFC(ANT) - RF1(TX)$ ON
1	1	0	ISO State[3]
0	0	0	V_{DD} OFF State[3]

[1] V_{DD} should be applied first before V_1 and V_2, otherwise may cause damage to the device.
[2] There are internal pull-downs to ground on both V_1 and V_2 control pins, the state at start-up without any control voltage applied will be $ANT - RX$ ON.
[3] If All OFF state is not used, the switch can be operated with single control pin V_1

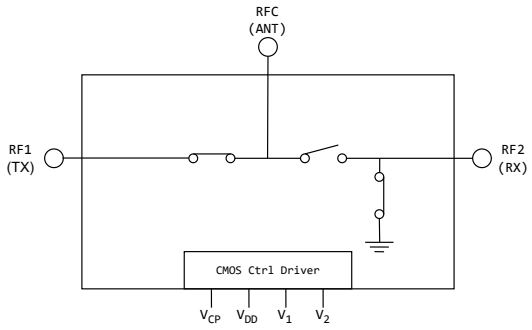

RFC-RF1 ON

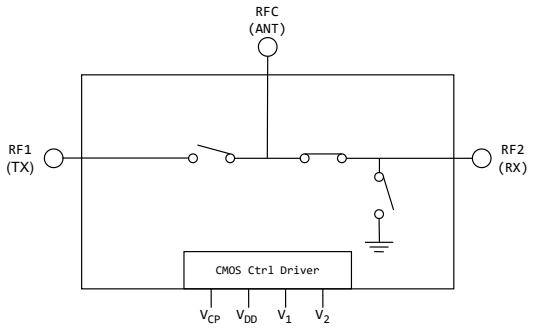

RFC-RF2 ON

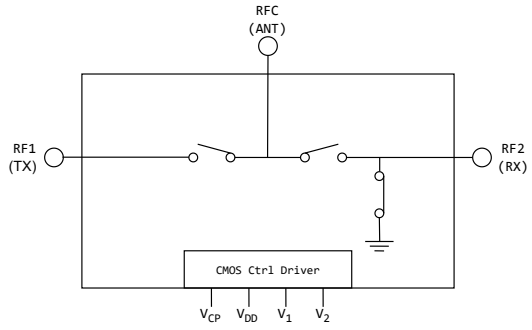

ISO (Isolation state)

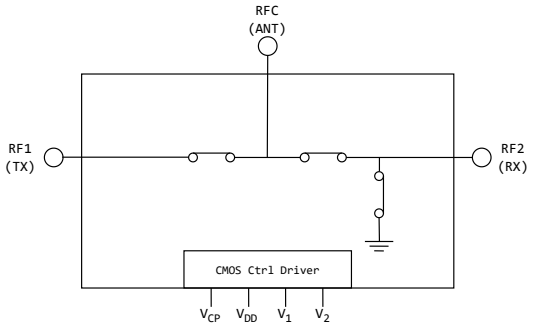

V_{DD} off state

©2024-2026 TagoreTech Inc.

Theory of Operation

Feeding external V_{CP} voltage of -18 V

TS8329K supports external voltage supply to V_{CP} to increase pulse repetition rate f_{PRR}. With external voltage supply, f_{PRR} can be increased at least to support pulse repetition rate more than 20 kHz, in some cases even up to 100 kHz. In order to use external voltage, it is mandatory to supply first V_{DD}, have a delay of 50 μs and then apply -18 V to V_{CP}. Shutdown should be in opposite order.

Application Information

The TS8329K is an asymmetric TX/RX switch: the TX path (RF1) handles 100 W peak power (50 dBm absolute maximum, 1 % duty cycle, 10 μs pulse) and 41 dBm CW, the RX path (RF2) is the low power receive path. Typical applications are TX/RX switching and receiver protection in 4G and 5G systems, cellular infrastructure, small cells, LTE relays and microcells, and radar. The EVB is unmatched (IDX00) and covers 500 MHz to 6 GHz without matching components; for RX operation above 6 GHz, an optional 0.2 pF shunt capacitor at the RX port extends the frequency range of the RX path. S-parameters of the EVB are available for download, see S-parameters.

Schematics and Evaluation Board

Only two external components are recommended, 1 nF for V_{CP} and 10 nF for V_{DD} lines. Pin 17 in the schematic refers to the center (thermal) pad of the device. For a 7 GHz matching circuit, add a shunt 0.2 pF capacitor C_{RX} (PPI 0603N) at the RX port, as close as possible to the IC (dashed in the schematic). The shunt capacitor extends the usable frequency range of the RX path, as demonstrated by the matched RX insertion loss measurement in Typical characteristics.

Table 8: Components used for TS8329K EVB

Reference	Part number / Value	Description	Notes
C_{VDD}	10 nF	Capacitor	GRM155R71H103KA88
C_{VCP}	1 nF	Capacitor	GRM155R71H102KA01D
C_{RX} (optional)	0.2 pF	Shunt capacitor (PPI 0603N)	For operation above 6 GHz, at the RX port, as close as possible to the IC

©2024-2026 TagoreTech Inc.

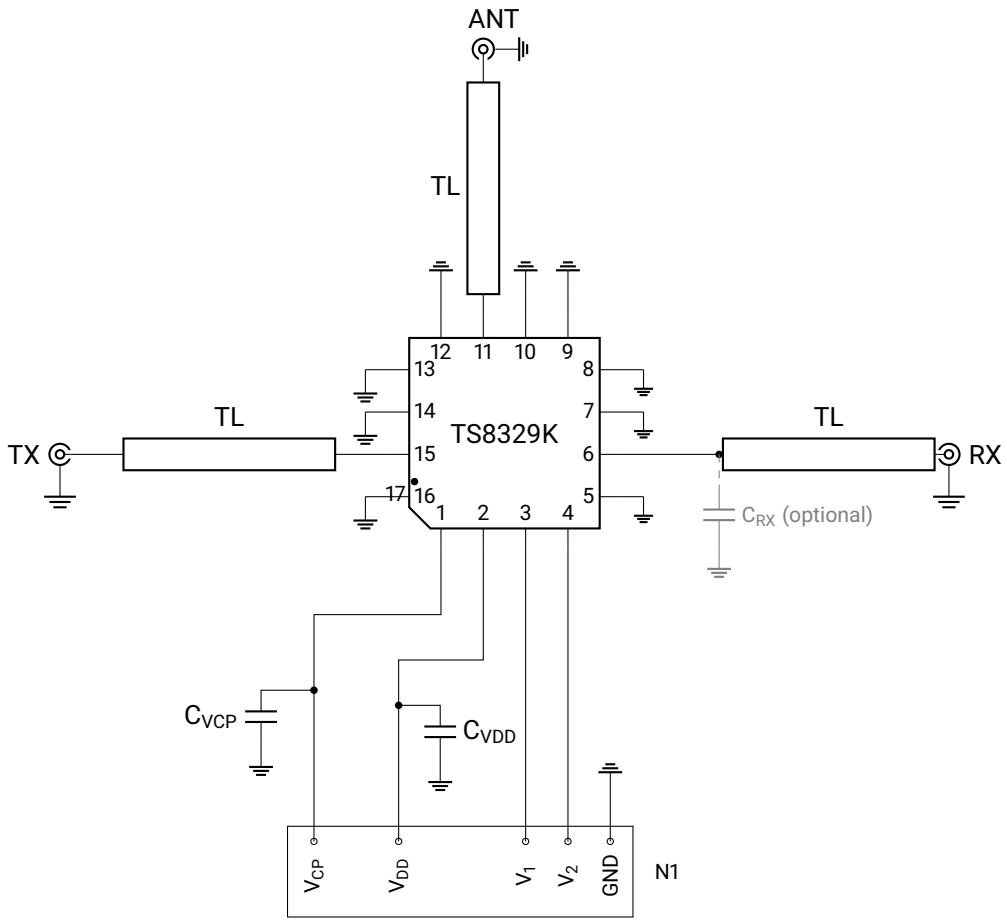

Schematic of TS8329K-EVB

©2024-2026 TagoreTech Inc.

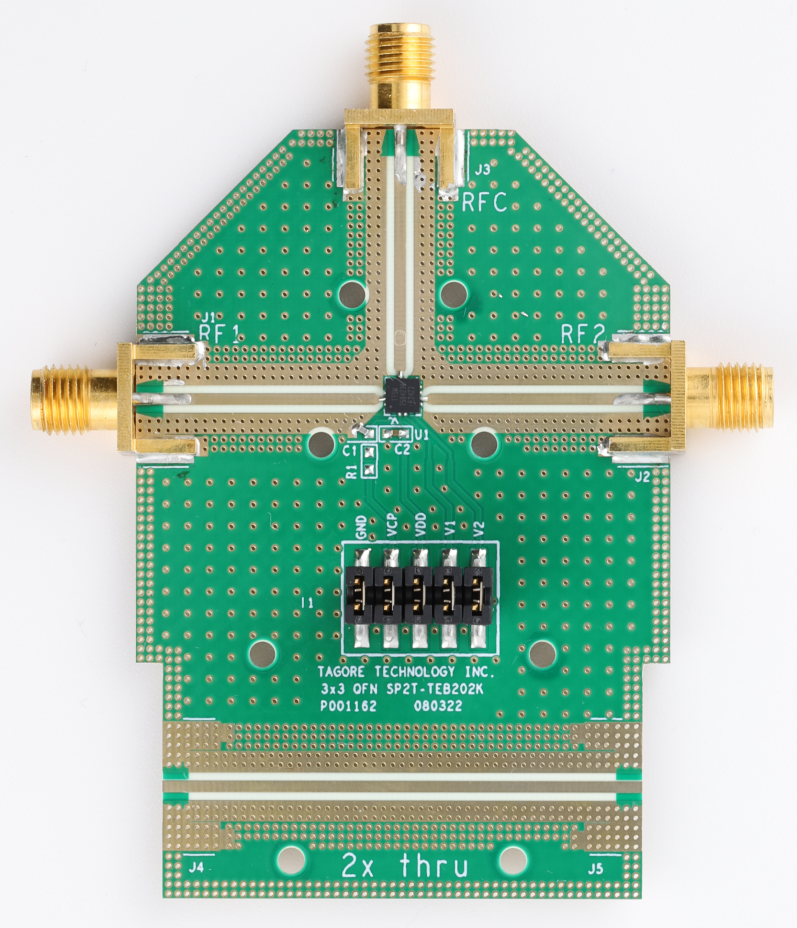

Photo of TS8329K-EVB

©2024-2026 TagoreTech Inc.

S-parameters

S-parameters of the presented EVB configuration (IDX00, no matching components) can be downloaded from this link: Download TS8329K S-parameters

Table 9: Port definitions in s-parameter files and plots.

PIN name	Port numbers	S-parameters	Function
RFC (ANT)	1	S11	
RF1 (TX)	2	S22	
RF2 (RX)	3	S33	
TXON (RF1ON)	12	S21	ANT-TX ON
RXON (RF2ON)	13	S31	ANT-RX ON

Content of s-parameter repository:

```
TS8329K.zip
└── TS8329K
    └── IDX_00 ..... IDX00, no matching components
        ├── Readme.txt ..... matching network description
        ├── TS8329K_RF1ON_3PORT.s3p ..... S3P file for ANT-TX ON mode (TXON)
        └── TS8329K_RF2ON_3PORT.s3p ..... S3P file for ANT-RX ON mode (RXON)
```


©2024-2026 TagoreTech Inc.

Typical characteristics

Performance up to 8.5 GHz, unmatched (IDX00)

These measurements were obtained using the TS8329K-EVB with CPW (Coplanar Waveguide) losses de-embedded from the raw data, without matching components. From 500 MHz to 6 GHz, the TX insertion loss is 0.23 to 0.50 dB, the RX insertion loss is 0.28 to 0.75 dB, return loss is better than 11.6 dB, $\mathrm{ANT} - \mathrm{RX}$ isolation is better than 28.4 dB, $\mathrm{ANT} - \mathrm{TX}$ isolation is better than 18.4 dB and $\mathrm{TX} - \mathrm{RX}$ isolation is better than 31.5 dB. The TX path stays below 0.8 dB insertion loss up to 8.5 GHz. Without matching, the RX insertion loss exceeds 1 dB above 6.7 GHz; a shunt capacitor at the RX port extends the frequency range of the RX path, see the matched RX measurement below. All performance plots are based on EVB_IDX00 configuration. Complete S-parameter data is available in the accompanying file.

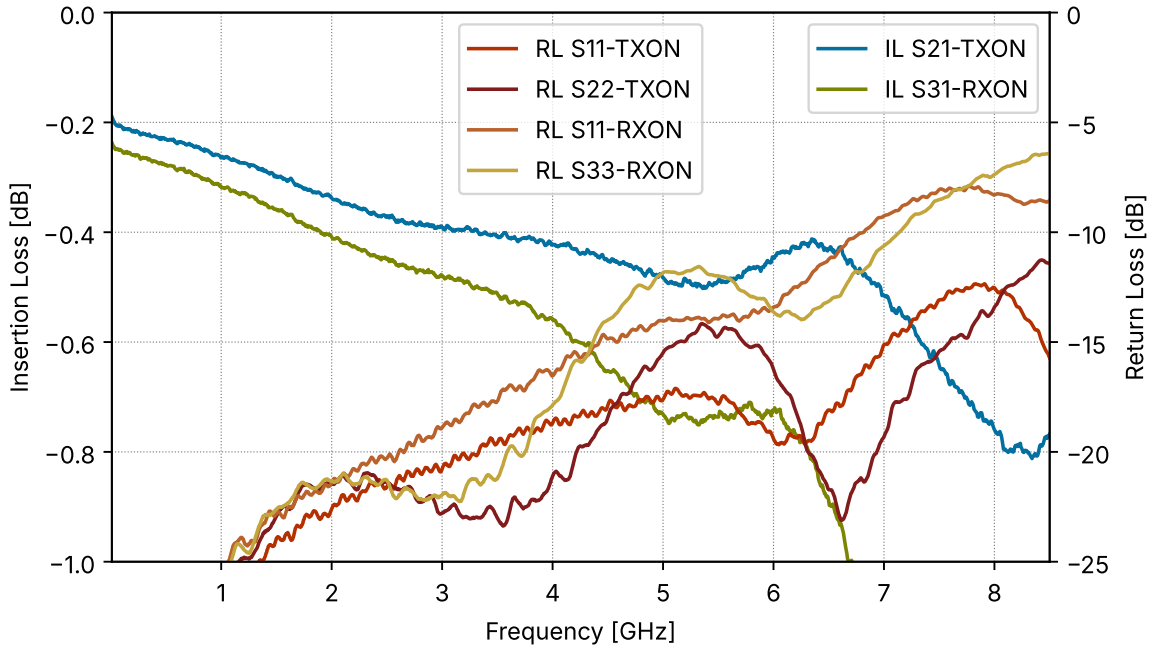

Insertion loss and Return loss, $\mathrm{ANT} - \mathrm{TX}$ and $\mathrm{ANT} - \mathrm{RX}$.

©2024-2026 TagoreTech Inc.

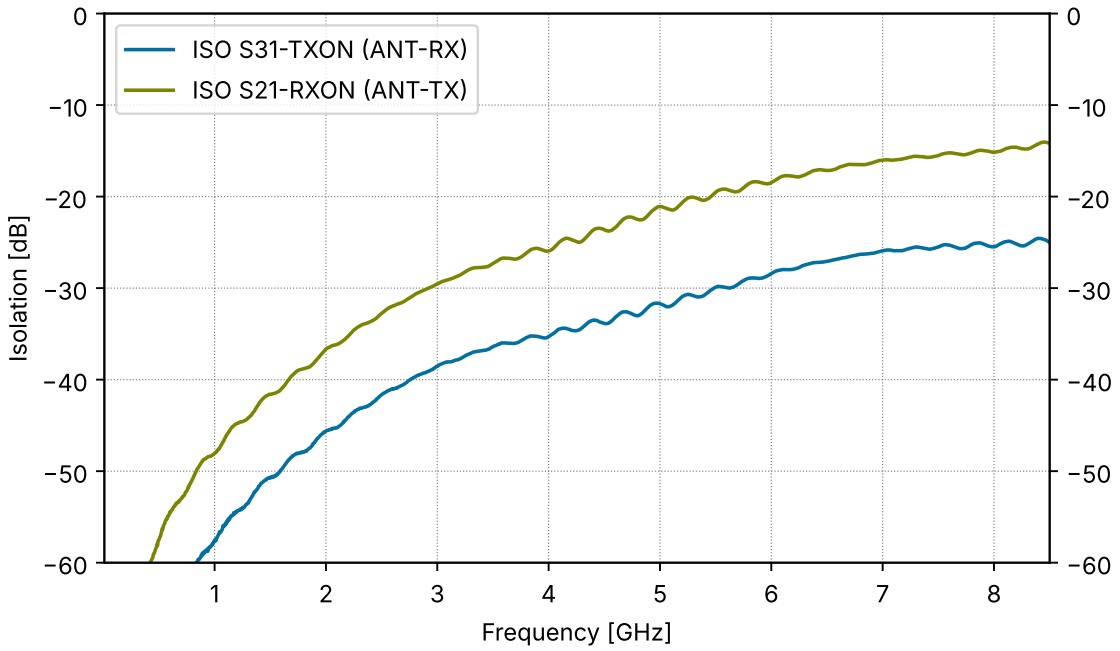

ANT − RX and ANT − TX isolation of the non-active port.

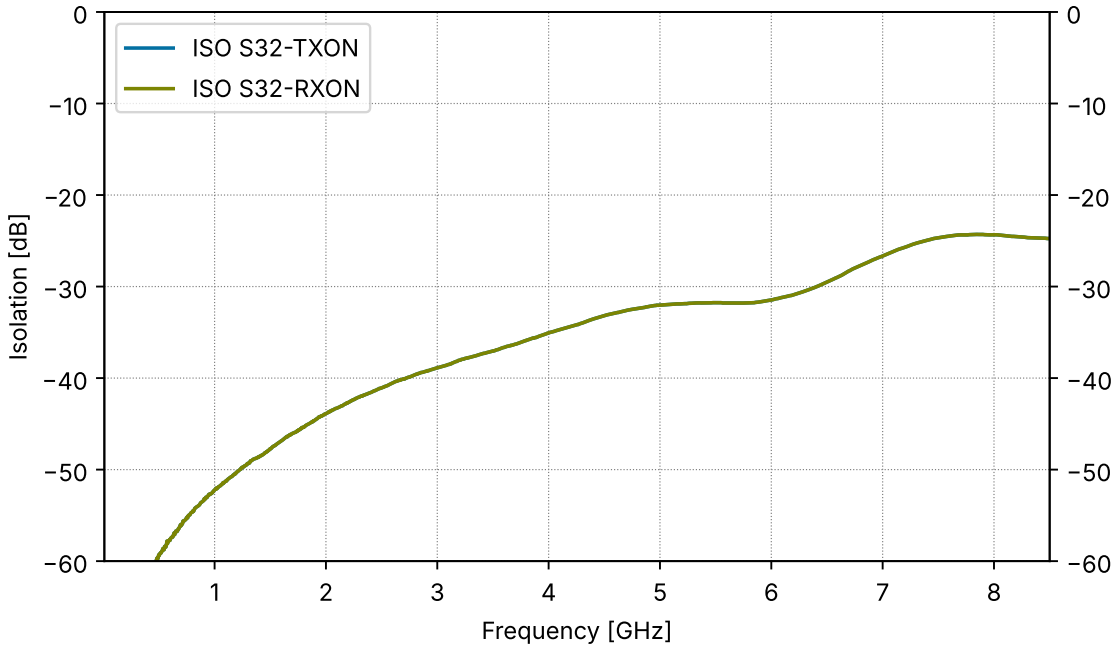

TX − RX isolation.

©2024-2026 TagoreTech Inc.

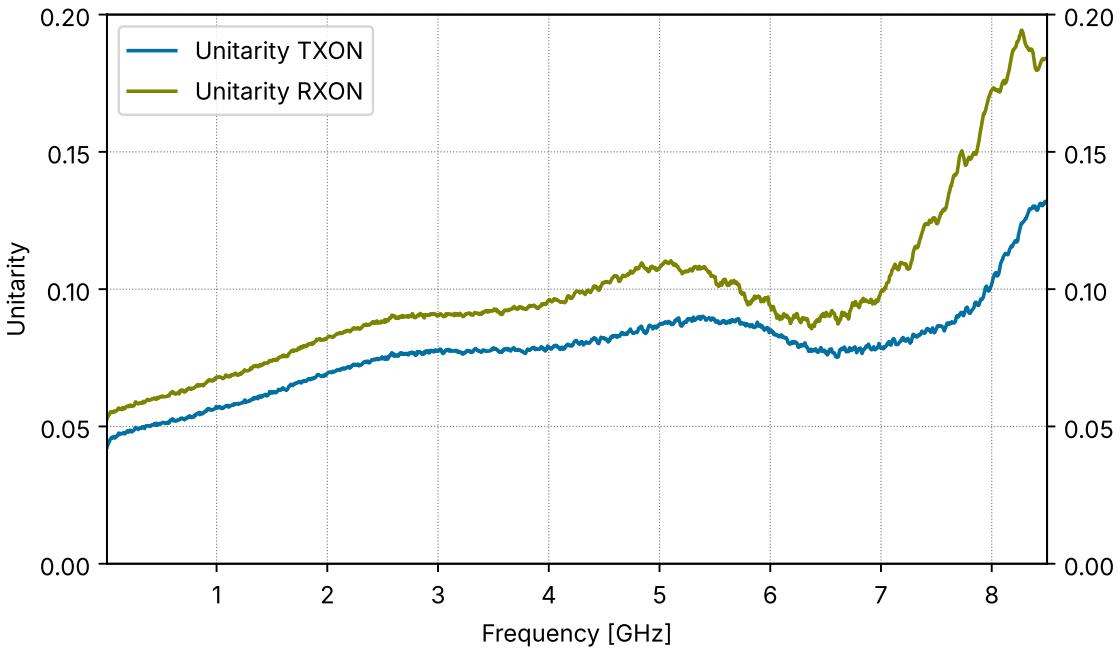

Unitarity, power absorption of the component, $1 - |S_{11}|^2 - |S_{21}|^2 - |S_{31}|^2$

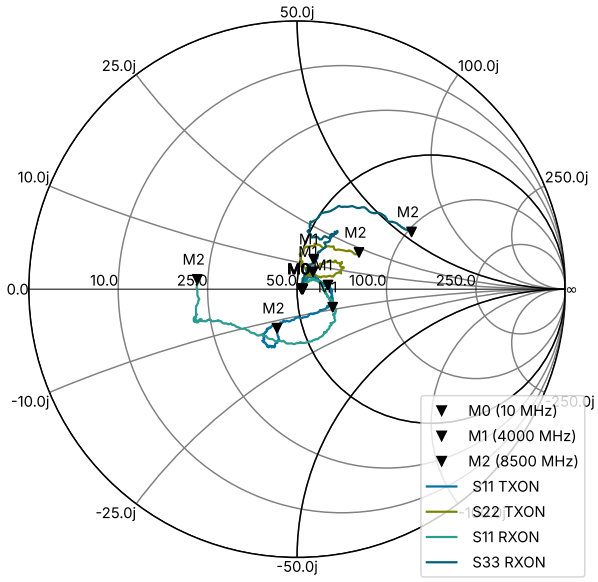

Matching of active port

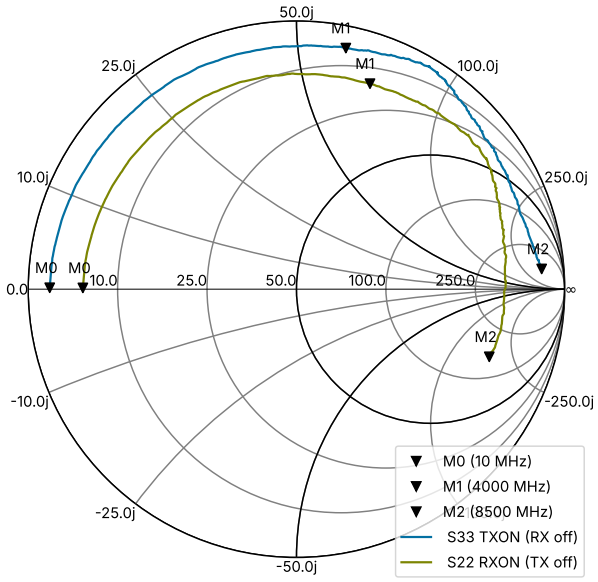

Termination impedance of non-active port.

©2024-2026 TagoreTech Inc.

Earlier measurements, including RX path with shunt capacitor matching

The following plots are earlier TS8329K EVB measurements. The RX insertion loss is shown with a shunt capacitor (0.2 pF) at the RX port: the shunt capacitor helps to extend the frequency range of the RX path, as demonstrated by comparing it with the unmatched RX insertion loss above. The exact position of the shunt capacitor on the EVB is not documented; place it as close as possible to the RX pin of the IC.

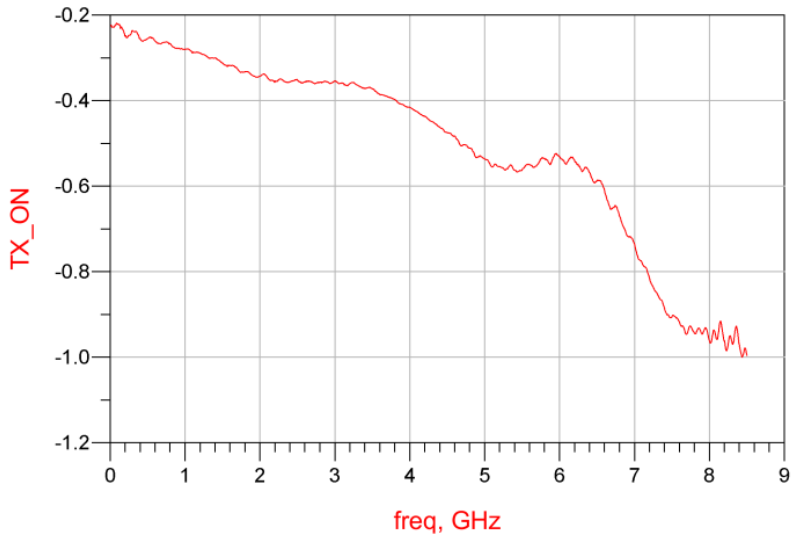

TX Insertion loss, $\mathrm{ANT} - \mathrm{TX}$.

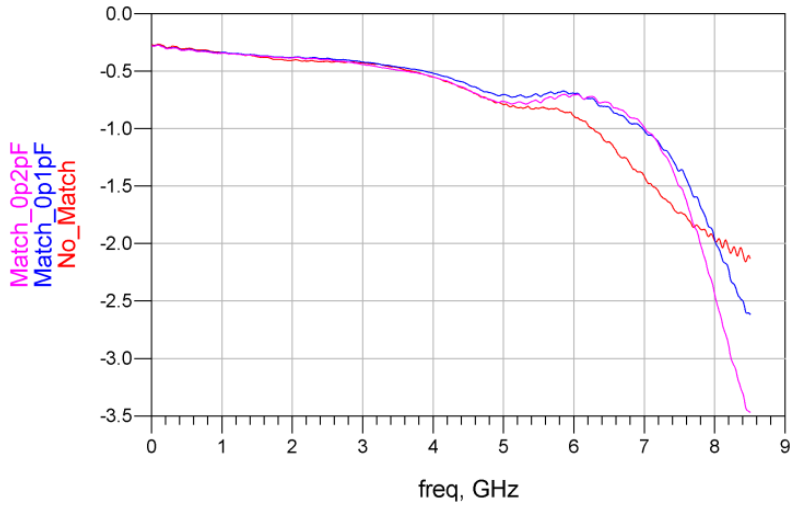

RX Insertion loss, $\mathrm{ANT} - \mathrm{RX}$, with shunt capacitor matching at the RX port.

©2024-2026 TagoreTech Inc.

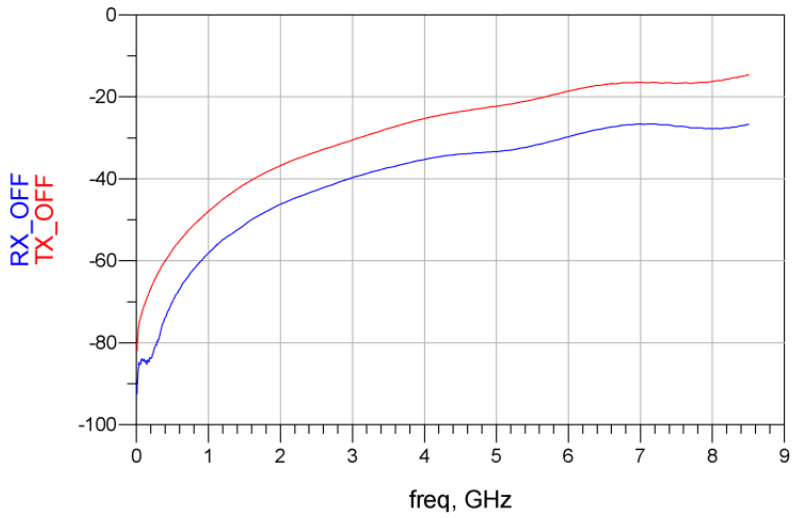

TX, RX Isolation.

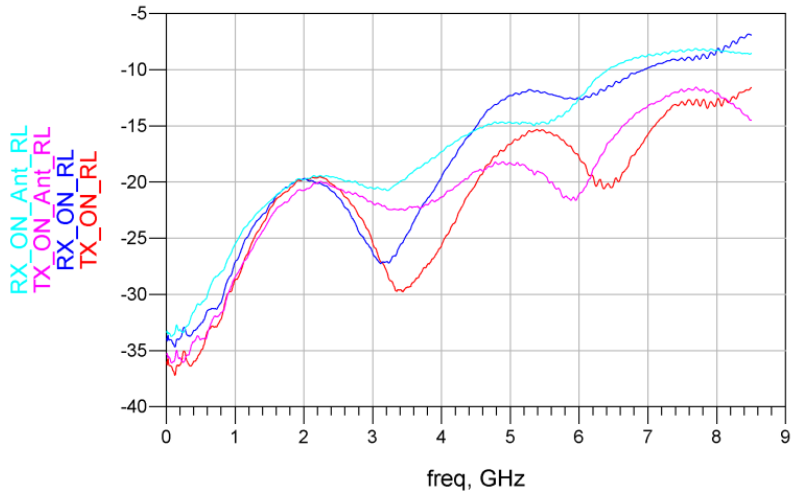

Return loss, TX, RX and ANT ports.

©2024-2026 TagoreTech Inc.

Compression measurement

In TagoreTech RF switches, compression is primarily attributed to thermal effects resulting from increased ohmic losses within the device. The TS8329K exhibits no signal clipping at the 0.1 dB compression point. Compression is referenced to the insertion loss at low power (median of the points at or below 36 dBm). Measured data points are indicated by dots (•), while the exponential model and its extrapolation are shown as lines (–). All curves of a plot use the same model shape (a common exponential slope); only the level differs between the curves.

The first plot shows the CW compression of the $\mathrm{ANT} - \mathrm{TX}$ path from 5.0 GHz to 6.0 GHz. Up to 41.6 dBm the measured compression stays below 0.09 dB; the model gives $P_{0.1\mathrm{dB}}$ of 42.0 to 44.6 dBm.

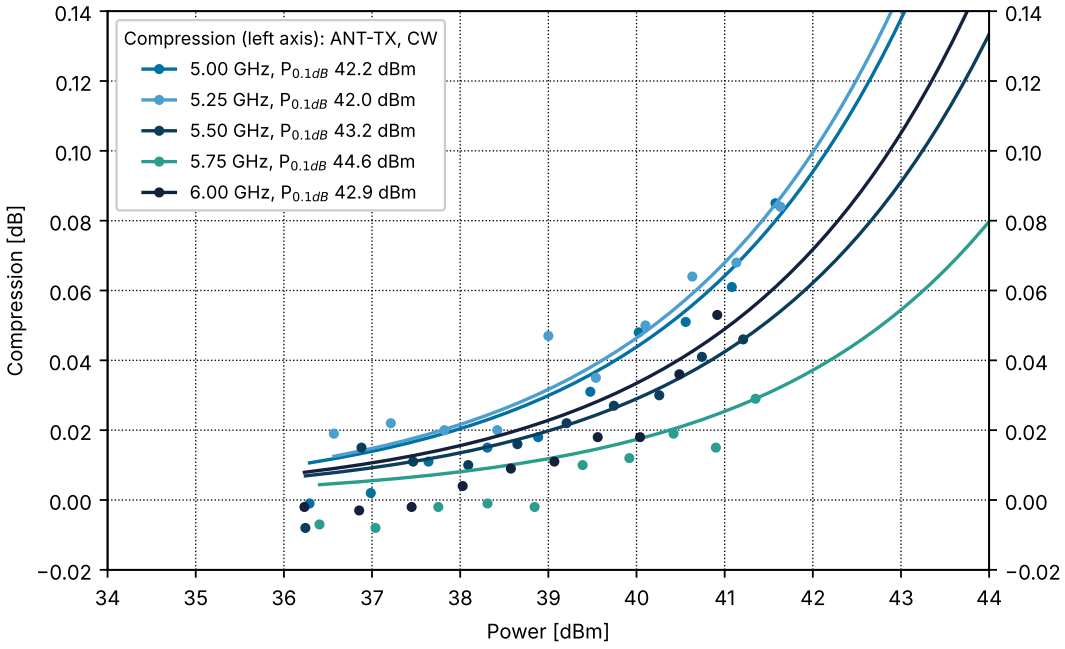

$\mathrm{ANT} - \mathrm{TX}$ CW compression measurement, 5.0 to 6.0 GHz.

The second plot shows the peak power compression at 800 MHz with pulsed signals (1% duty cycle, 10 μs pulse, 1 ms period) for the $\mathrm{ANT} - \mathrm{TX}$ and $\mathrm{ANT} - \mathrm{RX}$ paths, two runs each on the same sample. The peak $P_{0.1\mathrm{dB}}$ is 50.3 to 50.4 dBm on the TX path and 43.6 dBm on the RX path. The TX and RX paths have their own model shape, as the two branches of the asymmetric switch compress differently.

©2024-2026 TagoreTech Inc.

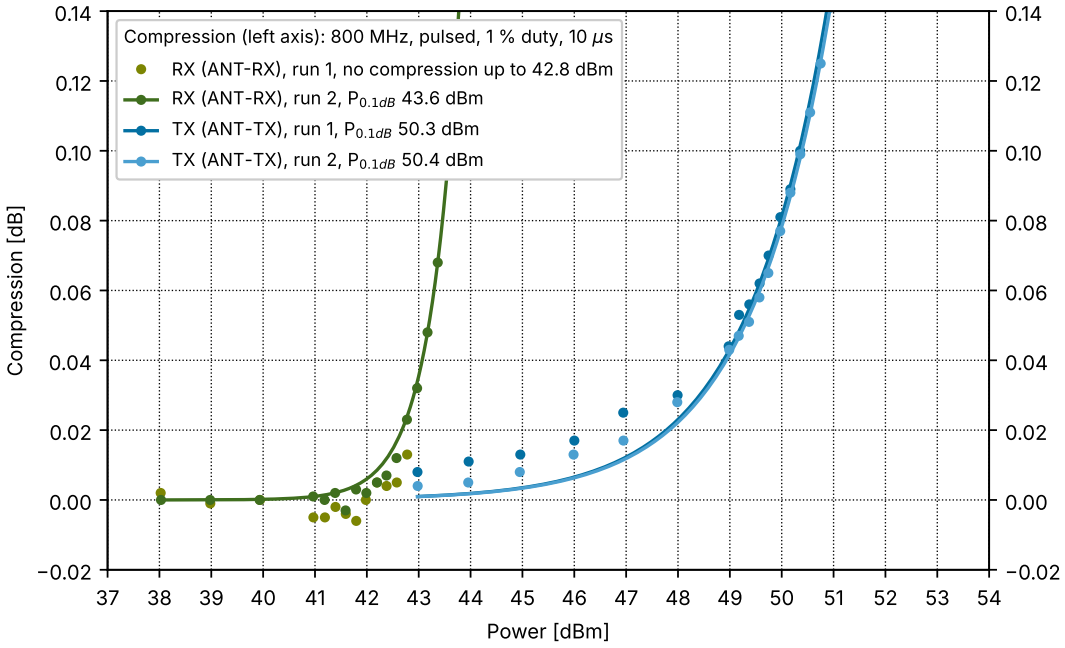

Peak power compression at 800 MHz, 1% duty cycle, $\mathrm{ANT-TX}$ and $\mathrm{ANT-RX}$.

©2024-2026 TagoreTech Inc.

Peak power handling with modulated signals

The TS8329K TX path is rated for 12.6 W (41 dBm) average power (CW, 100% duty cycle) and 79 W (49 dBm) peak power, where the peak power rating is characterized with 10 μs pulses at 1% duty cycle. The two ratings describe two different physical limits of the switch. The average power rating is a thermal limit: the power dissipated in the switch, and therefore the junction temperature, is set by the average RF power. The peak power rating is a voltage limit: the instantaneous RF voltage across the OFF-state transistors must remain below their breakdown voltage. At 79 W in a 50 Ω system, the RF peak voltage is 89 V.

Gallium Nitride is particularly well suited for this task. The high breakdown field of GaN allows a switch to sustain high RF peak voltages, so that the peak power capability of the TS8329K exceeds its average power rating by a factor of 6.3 (8 dB). A switch whose peak capability is equal to its average rating must be derated by the full peak-to-average ratio of the signal, whereas the TS8329K can handle the envelope peaks of modulated signals with little or no back-off.

Peak-to-average power ratio of QAM signals

Quadrature amplitude modulation (QAM), such as 16-QAM, 64-QAM or 256-QAM, does not have a constant envelope. The instantaneous envelope power fluctuates around the average power, and its peaks can be several dB above the average. The peaks are statistical in nature: the higher the level, the smaller the fraction of time for which the envelope exceeds it. This behavior is described by the complementary cumulative distribution function (CCDF) of the signal. The peak-to-average power ratio (PAPR) at a probability p is the level, relative to the average power, which the envelope exceeds for a fraction p of the time.

For single-carrier QAM, the PAPR is set by the constellation and by the pulse-shaping filter: a smaller root-raised-cosine (RRC) roll-off factor α gives a narrower spectrum but higher envelope peaks. For OFDM, the sum of many independently modulated subcarriers produces a nearly Gaussian signal, and the PAPR is practically independent of the QAM order of the subcarriers. OFDM therefore has a clearly higher PAPR than single-carrier QAM.

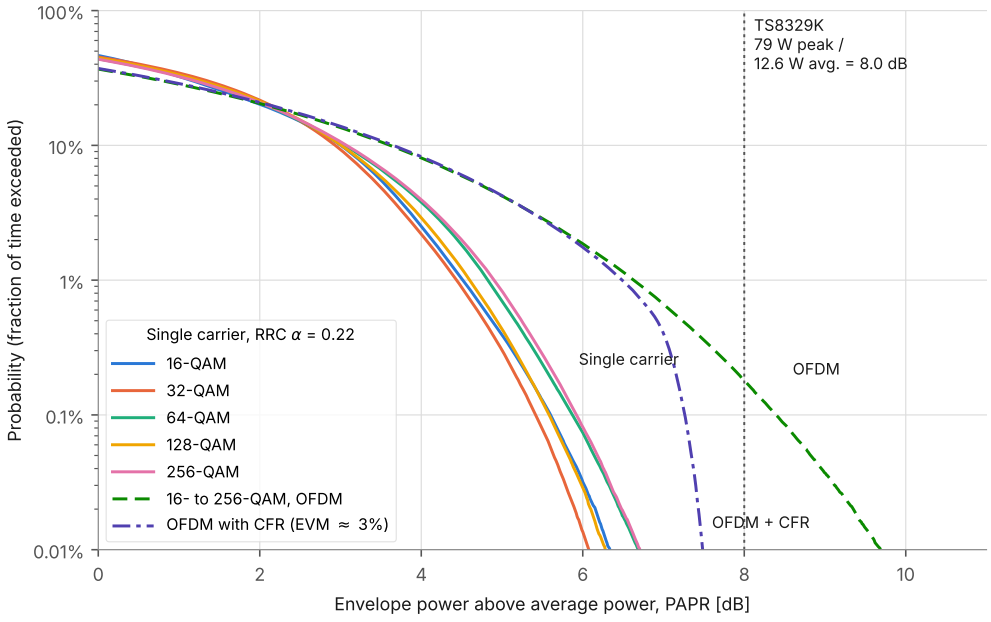

Figure 7: CCDF of the envelope power of QAM signals: fraction of time the envelope power exceeds the average power by the given PAPR. OFDM with CFR: iterative clipping and filtering, EVM ≈ 3%. The dotted line marks the 79 W / 12.6 W (8 dB) peak-to-average capability of the TS8329K TX path.

©2024-2026 TagoreTech Inc.

Crest factor reduction for OFDM

Because the highest envelope peaks of an OFDM signal are rare, practical OFDM transmitters apply crest factor reduction (CFR) in the digital baseband before the power amplifier. A common method is iterative clipping and filtering: the envelope is limited to a threshold above its average, and the spectral regrowth caused by the clipping is filtered away, so that the transmitted spectrum and adjacent-channel leakage are preserved. The price is in-band distortion, expressed as an increase in error vector magnitude (EVM). The amount of CFR that can be applied is therefore set by the EVM budget of the modulation: 16-QAM tolerates considerably more distortion than 256-QAM. CFR removes only the rare, highest peaks; the PAPR at 1% to 10% probability is practically unchanged, while the PAPR at 0.1% is reduced by 0.4 dB to 1.9 dB for EVM contributions of 1.5% to 5%. Table 10 includes typical values for OFDM with CFR.

Average power capability with modulated signals

Typical PAPR values are listed in Table 10. Figure 7 shows the complete CCDF curves together with the 8 dB peak-to-average capability of the TS8329K TX path. At the full 12.6 W average rating, the envelope of a single-carrier 16- to 256-QAM signal practically never exceeds the 79 W peak level (less than 0.01% of the time), and neither does an OFDM signal with CFR. An OFDM signal without CFR exceeds the same level about 0.2% of the time, well within the 1% duty cycle of the peak power rating. If the envelope peaks are required to stay within 79 W also at the 0.1% probability level, the average power is limited to the values given in the last column of the table. The envelope peaks of modulated signals last only a fraction of a symbol period, which is much shorter than the 10 μs pulses used for the peak power characterization.

The QAM and OFDM information in this section is provided for information only. It is based on calculated signal statistics, has not been fully characterized on the TS8329K, and is not binding on TagoreTech; the ratings given in the Absolute Maximum Ratings and Electrical Specifications sections apply.

©2024-2026 TagoreTech Inc.

Table 10: Peak-to-average power ratio (PAPR) of QAM signals, exceeded for the given fraction of time.

Modulation	**PAPR [dB] at probability**[2]			**TS8329K max.**
	10%	**1%**	**0.1%**	**avg. power [W]**[1]
Single carrier, RRC pulse shaping, $\alpha = 0.22$				
16-QAM	3.0	4.5	5.6	12.6
32-QAM	2.9	4.4	5.4	12.6
64-QAM	3.1	4.8	5.8	12.6
128-QAM	3.0	4.6	5.6	12.6
256-QAM	3.1	4.9	5.9	12.6
Single carrier, RRC pulse shaping, $\alpha = 0.35$				
16-QAM	3.0	4.4	5.1	12.6
32-QAM	3.0	4.2	4.8	12.6
64-QAM	3.0	4.8	5.6	12.6
128-QAM	3.0	4.5	5.2	12.6
256-QAM	3.1	4.8	5.7	12.6
OFDM, 1024 subcarriers, no crest factor reduction				
16-QAM	3.6	6.6	8.4	11.5
32-QAM	3.6	6.6	8.4	11.5
64-QAM	3.6	6.6	8.4	11.5
128-QAM	3.6	6.6	8.4	11.5
256-QAM	3.6	6.6	8.4	11.4
OFDM, 1024 subcarriers, with crest factor reduction (clipping and filtering)[3]				
CFR for EVM ≈ 1.5%, e.g. 256-QAM	3.6	6.6	8.0	12.4
CFR for EVM ≈ 3%, e.g. 64/128-QAM	3.7	6.5	7.3	12.6
CFR for EVM ≈ 5%, e.g. 16/32-QAM	3.7	6.2	6.5	12.6

[1] Average power at which the envelope peaks at the 0.1% probability level remain within the 79 W peak power rating, $P_{\text{avg}} = 79\,\text{W}/10^{\text{PAPR}_{0.1\%}/10}$, limited to the 12.6 W average power rating. Indicative values; in a mismatched load (VSWR > 1) the RF peak voltage increases and further back-off may be required.

[2] PAPR values are calculated from the envelope power of ideal, unclipped signals. Measured values depend on the transmitter, its filtering, and any crest factor reduction applied.

[3] Iterative clipping and filtering, 4 iterations, clipping level 8.0 dB, 7.0 dB and 6.0 dB above the average power; EVM is the in-band distortion added by the CFR only. The PAPR after CFR is practically independent of the QAM order; the QAM orders given are examples of modulations whose EVM budget typically allows the stated CFR. Actual CFR performance depends on the implementation.

©2024-2026 TagoreTech Inc.

Device Package information

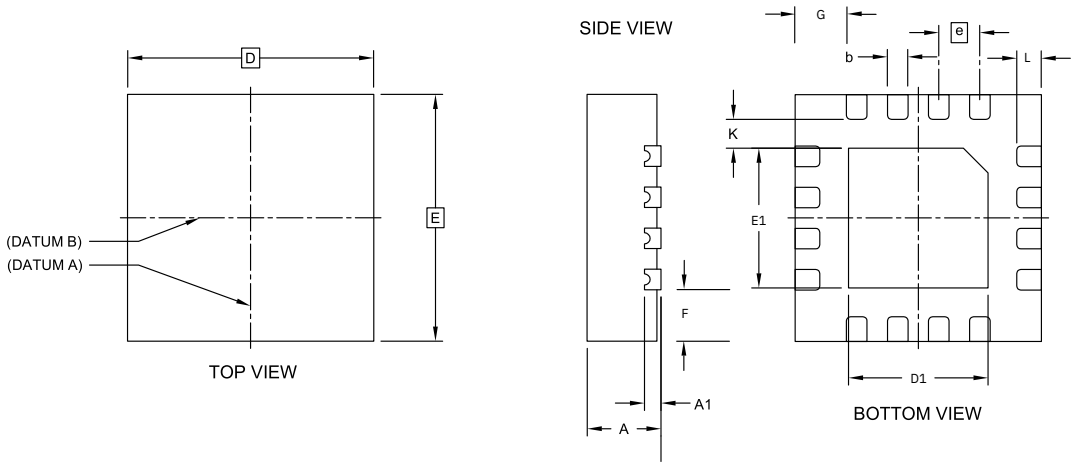

Figure 8: 16-pin QFN 3.0 x 3.0 x 0.75 mm^3 package drawing.

Please refer to application notes TN-001 PCB Design guideline and TN-002 Solder Rework at TagoreTech web page for PCB and soldering guidelines.

Table 11: Device Package Dimensions

Dimension	Value [mm]	Tolerance [mm]	Dimension	Value [mm]	Tolerance [mm]
A	0.75	±0.05	E	3.00 BSC	±0.05
A1	0.203	±0.02	E1	1.70	±0.05
b	0.25	±0.05	F	0.625	±0.05
D	3.00 BSC	±0.05	G	0.625	±0.05
D1	1.70	±0.05	L	0.25	±0.05
e	0.50 BSC	±0.05	K	0.40	±0.05

Lead finish: Pure Sn without underlayer; thickness 7.5 μm – 20 μm (typical 10 – 12 μm).

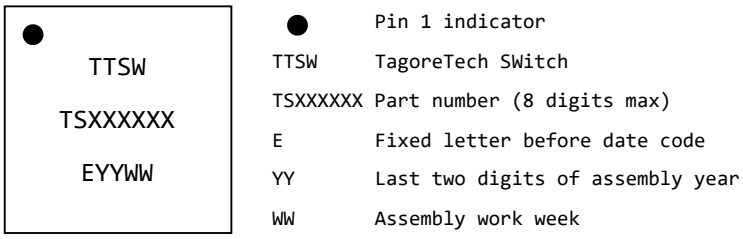

Figure 9: Part marking specification.

©2024-2026 TagoreTech Inc.

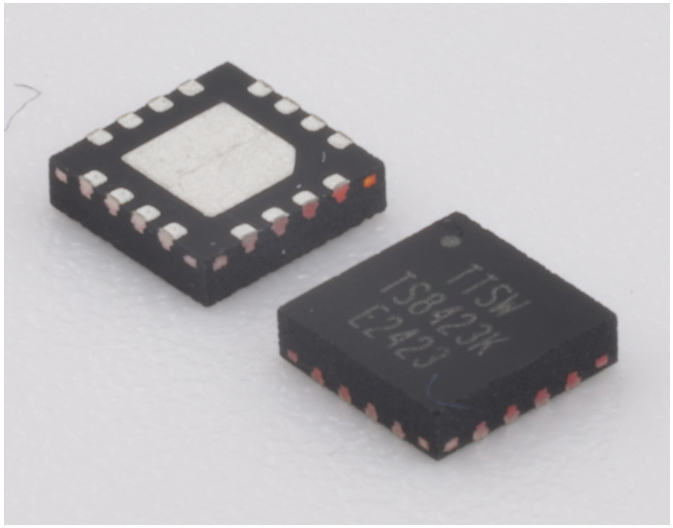

Figure 10: TS8329K photo, top and bottom side.

©2024-2026 TagoreTech Inc.

PCB Land Design

Notes:

- 4-layer PCB is recommended.
- Via diameter is recommended to be 0.2mm to prevent solder wicking inside the vias.
- Thermal vias shall only be placed on the center pad.
- The maximum via number for the center pad is 3(X)×3(Y)=9.

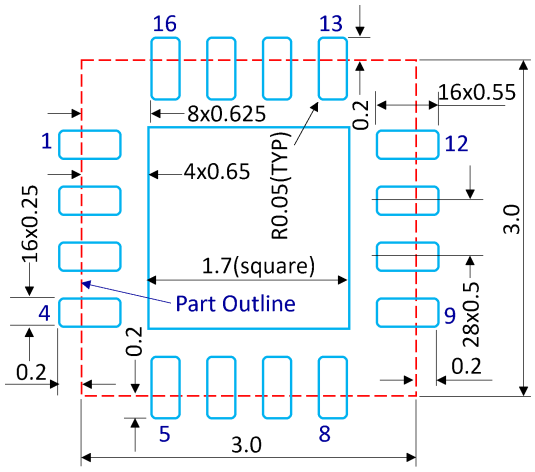

Figure 11: PCB land pattern, dimensions in [mm].

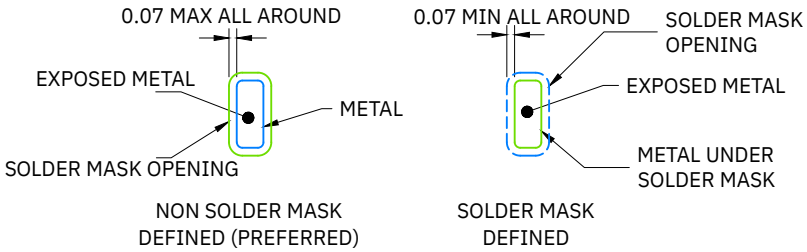

Figure 12: Solder mask opening, dimensions in [mm].

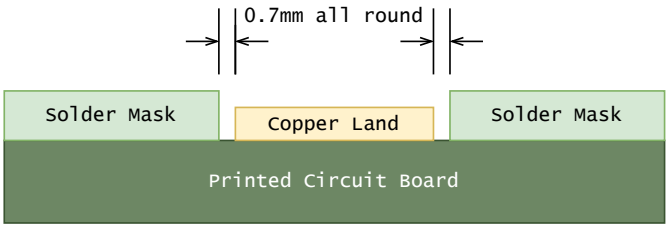

Figure 13: Preferred solder mask opening, side view, dimensions in [mm].

©2024-2026 TagoreTech Inc.

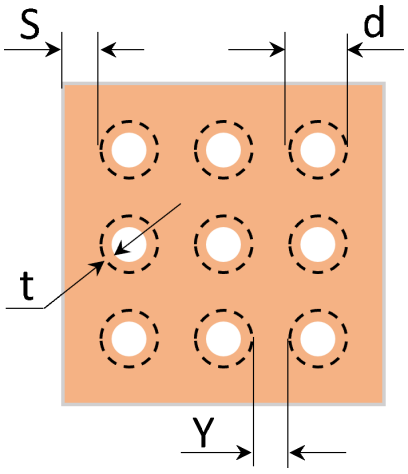

Figure 14: Thermal Via Pattern, Recommended Values: S≥0.15mm; Y≥0.20mm; d=0.2mm; Plating Thickness t=25μm or 50μm.

©2024-2026 TagoreTech Inc.

PCB Stencil Design

Notes:

- Laser-cut, stainless steel stencil is recommended with electro-polished trapezoidal walls to improve the paste release.
- Stencil thickness is recommended to be 125μm.

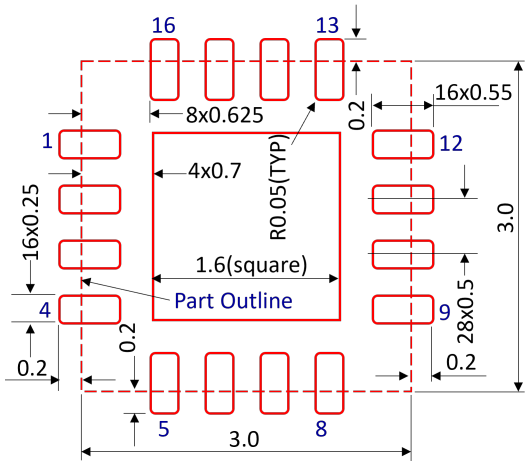

Figure 15: Stencil Openings, dimensions in [mm].

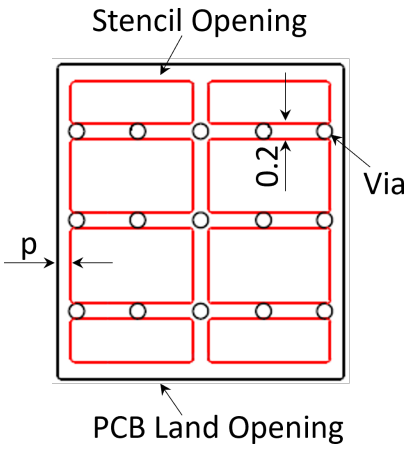

Figure 16: Stencil Openings Shall not Cover Via Areas If Possible, dimensions in [mm].

©2024-2026 TagoreTech Inc.

Tape and Reel Information

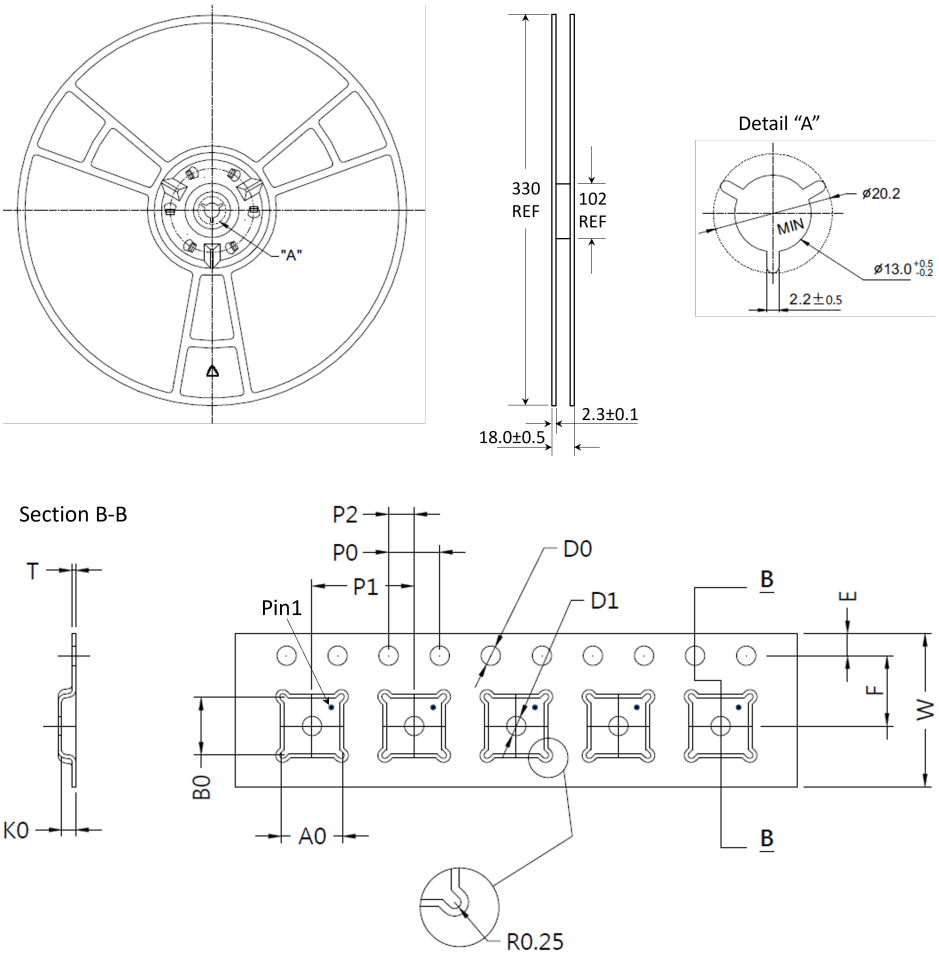

A0[mm]	B0[mm]	D0[mm]	D1[mm]	E[mm]	F[mm]	K0[mm]	P0[mm]	P1[mm]	P2[mm]	T[mm]	W[mm]
3.35	3.35	1.50	1.50	1.75	5.50	1.10	4.00	8.00	2.00	0.30	12.00

©2024-2026 TagoreTech Inc.

Glossary

IL	Insertion loss
ISO	Isolation
RL	Return loss
VSWR	Voltage Standing Wave Ratio
ANT	Antenna port or common port, sometimes referred as RFC
TX	Transmit port (RF1)
RX	Receive port (RF2)
ISO state	Isolation state: all RF ports off ($\mathrm{V}_2 = 1, \mathrm{V}_1 = 0$)
V_{CP}	Charge pump voltage pin
f_{PRR}	Pulse repetition rate (maximum rate of switching events)
EVB	Evaluation board
IDX	EVB configuration index of the S-parameter files (IDX00: no matching components)
Unitarity	Describes power absorption of the component, $1 - \lvert S_{11}\rvert^2 - \lvert S_{21}\rvert^2 - \lvert S_{31}\rvert^2$
CPW	Coplanar waveguide
CCDF	Complementary cumulative distribution function
CFR	Crest factor reduction
EVM	Error vector magnitude
OFDM	Orthogonal frequency-division multiplexing
PAPR	Peak-to-average power ratio
QAM	Quadrature amplitude modulation
RRC	Root-raised-cosine (pulse-shaping filter)

Changelog

©2024-2026 TagoreTech Inc.

Table 12: Changelog

Date	Revision	Notes
11/19/2025	2.1	TS8329K datasheet, previous format.
09/20/2026	3.00	Datasheet converted to common TagoreTech datasheet template, V_{CP} absolute maximum rating added.
10/27/2026	3.10	Typical characteristics from the measured S-parameters (IDX00, 10 MHz to 8.5 GHz), S-parameter repository and download link; earlier plots kept, with a note on the RX shunt capacitor matching. Insertion loss, isolation and return loss typical values from the same data. CW compression measurement at 5.0 to 6.0 GHz and peak power compression at 800 MHz (1% duty cycle, TX and RX). P_{maxCW} 41 dBm and P_{maxpeak} 49 dBm, peak $P_{0.1\mathrm{dB}}$ RX 43.5 dBm, absolute maximum peak input power 50 dBm and RF peak voltage 100 V added. Peak power handling with modulated signals added: PAPR of QAM and OFDM signals, crest factor reduction, CCDF plot. QR code link to the latest datasheet, links to application notes TN-001/TN-002, distributor table reformatted, glossary extended, V_{DD} to V_{CP} delay 50 μs, EVB component part numbers.
11/05/2026	3.11	House style update: evaluation board renamed TS8329K-EVB (as listed at DigiKey) and DigiKey EVB link, EVB schematic redrawn (straight control lines, separate C_{VCP} and C_{VDD}, optional RX shunt capacitor C_{RX} shown), Smith chart markers at exactly 10 MHz, 4 GHz and 8.5 GHz, Application Information section, subtitle and -18 V typography, glossary extended. No data changes.

©2024-2026 TagoreTech Inc.

Legal Information

Published by

TagoreTech Inc.
601 Campus Drive, Suite B3
Arlington Heights, IL 60004, USA

©2024-2026 All Rights Reserved

TagoreTech is a fabless US semiconductor company specializing in GaN RF solutions: high-power RF switches in unique GaN-on-Si technology, RF power amplifiers in GaN-on-SiC, and reconfigurable front-end solutions — such as tunable power amplifiers and antenna tuning — that combine the two. TagoreTech serves defense, radar, datalink, 5G infrastructure, and public safety markets.

Legal Disclaimer

The information provided in this document is believed to be accurate and reliable, but shall in no event be regarded as a guarantee of conditions or characteristics. TagoreTech makes no warranties, express or implied, including without limitation any implied warranty of merchantability or fitness for a particular purpose. TagoreTech assumes no responsibility for the consequences of the use of this information, nor for any infringement of patents or other rights of third parties which may result from its use. No license is granted by implication or otherwise under any patent or patent rights of TagoreTech. Customers are responsible for validating the suitability of TagoreTech products in their own applications and for compliance with all applicable laws and regulations, including export control requirements. Specifications are subject to change without notice. Errors and omissions excepted.

Use in critical applications. TagoreTech products are not designed or authorized for use in life-support devices or systems, safety-critical applications, or applications where failure could reasonably be expected to cause personal injury, unless expressly agreed in writing by an authorized representative of TagoreTech. Any such use is at the customer's own risk.

Sales Contact

For further information on technology, delivery terms, conditions, and prices, please contact TagoreTech: support@tagoretech.com or contact our distributors or representatives as listed at TagoreTech website. Please click the blue links.

Buy TS8329K directly

DigiKey — Digikey TS8329K
Digikey TS8329K-EVB

RichardsonRFPD An Arrow Company — RFPD TS8329K

TS8329K Product information

Please visit TS8329K product page for further information TS8329K Product Page

Latest version of TS8329K datasheet is available for download: TS8329K Datasheet

S-parameters of the presented EVB are available: TS8329K S-parameters

TagoreTech Inc. Product Brochure and datasheets

Tagore Product Brochure and links to all available datasheets is available for download:
TagoreTech Product Brochure

Scan for the latest datasheet