Asym SPDT 400 W_{pulse}/631 W_{peak} T/R Switch 0.5 GHz to 4.0 GHz

Features

- Frequency Range 500 MHz to 4.0 GHz
- Low TX insertion loss:
  0.26 dB @ 915 MHz
  0.37 dB @ 2.4 GHz – 2.8 GHz (matched)
  0.53 dB @ 3.3 GHz – 3.8 GHz (matched)
- High RX isolation:
  53 dB @ 915 MHz
  41 dB @ 2.4 GHz – 2.8 GHz (matched)
  36 dB @ 3.3 GHz – 3.8 GHz (matched)
- 400 W_{pulse}, 20 % duty cycle, 2.0 ms pulse width
- At least 631 W_{peak} (58 dBm), 1 % duty cycle, LTE/5G
- Switching time 0.75 µs
- Tuning inductor pins for an isolation notch
- Low power consumption, less than 1 mW
- No external DC blocking capacitors on RF lines
- Versatile 2.6 V – 5.25 V power supply
- No need to supply negative voltages

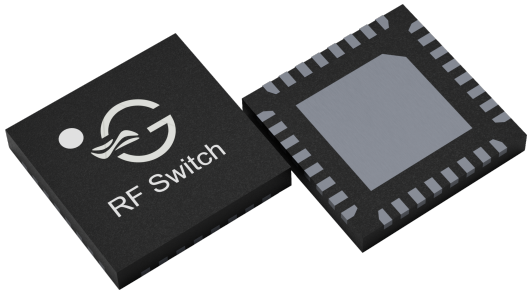

Figure 1: TS8728N in 5.0 x 5.0 mm^2 QFN 32-pin package.

Applications

- L-band radar
- S-band radar
- IFF / SSR
- LTE and 5G transmit/receive switching

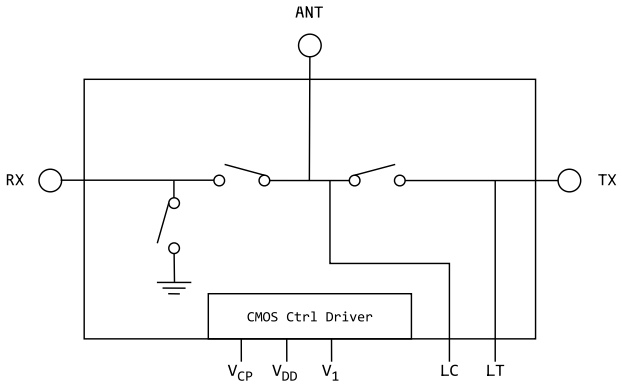

Figure 2: TS8728N functional diagram

RoHS10/REACH/Halogen free

General Description

The TS8728N is an asymmetrical reflective Single Pole Double Throw (SPDT) GaN switch designed for high-power transmit/receive switching. The TX branch has a series switch only, which gives low insertion loss and high power handling, and the RX branch has a series and a shunt switch, which gives high isolation from ANT to RX in transmit mode. The TS8728N covers 500 MHz to 4.0 GHz and handles 400 W pulse power with 20 % duty cycle and 2.0 ms pulse width; the peak power capability is at least 631 W (58 dBm) with 1 % duty cycle, for example with LTE and 5G signals. An external tuning inductor between pins 17 and 18 creates a notch in the isolation curve. No negative supply voltage or external RF DC-blocking capacitors are required.

The TS8728N is housed in a compact 5.0×5.0 mm^2 32-lead Quad Flat No-lead (QFN) plastic package.

Contents

Features 1
Applications 1
General Description 1
Ordering information 3
Pin Assignment 4
Absolute Maximum Ratings 5
Electrical Specifications 6
Switching time definition . . . 9
Switch Control table 10
Theory of Operation 11
Asymmetrical switch topology . . . 11
Tuning inductor and isolation notch . . . 11
Application Information 11
Schematics and Evaluation Board 12
Unmatched EVB (IDX00), up to 1.0 GHz . . . 13
Matching examples (IDX07, IDX01, IDX02) . . . 15
Typical characteristics 16
Performance up to 2.0 GHz, unmatched (IDX00) . . . 16
Performance 1030 to 1090 MHz, matched (IDX07) . . . 18
Performance 2.4 to 2.8 GHz, matched (IDX01) . . . 20
Performance 3.3 to 3.8 GHz, matched (IDX02) . . . 22
Pulsed compression, 3500 MHz . . . 24
Switching time . . . 25
Device Package information 26
PCB Land Design 28
PCB Stencil Design 29
Tape and Reel Information 30
Glossary 31
Changelog . . . 31
Legal Information 32
Published by . . . 32
Legal Disclaimer . . . 32
Sales Contact . . . 32
Buy TS8728N directly . . . 32
TS8728N Product Information . . . 32
TagoreTech Inc. Product Brochure and datasheets . . . 32

©2024-2026 TagoreTech Inc.

Ordering information

Table 1: Ordering Information

Device Part Number	Package Type	Notes
TS8728N	32-Pin 5.0x5.0x0.75 mm^3 QFN	Core part number
TS8728N-EVB	Evaluation Board	
TS8728NMTRPBF[1]	330 mm reel, 3 000 pcs	Full reel

[1] MTRPBF - M: Manufacturing, TR: Tape and Reel, and PBF: lead free.

Table 2: Tape and Reel Information

Form	Quantity	Reel Diameter	Reel Width
Tape and Reel	3 000	13” (330mm)	18mm

©2024-2026 TagoreTech Inc.

Pin Assignment

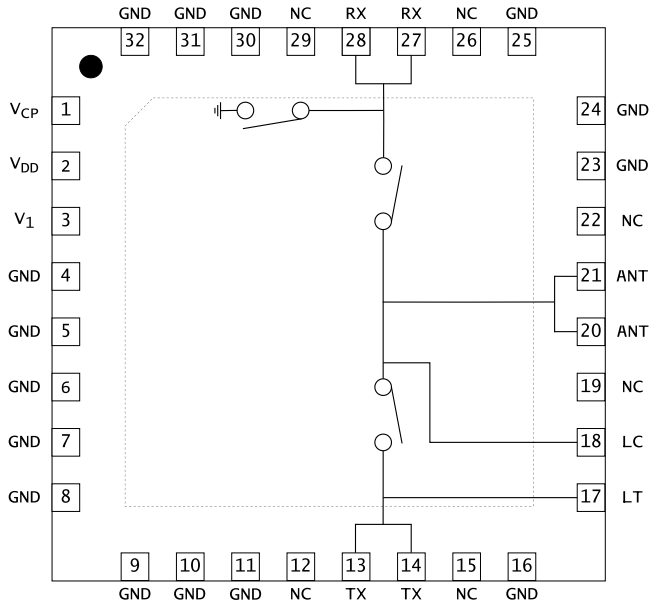

Figure 3: TS8728N pin assignment [top view]

Table 3: Pin Definition

Pin Number	Pin Name	Description
1	V_{CP}	Internal charge pump voltage output, connect a 100 nF capacitor to GND on this pin.
2	V_{DD}	DC Power Supply
3	V_1	Switch control input
13, 14	TX	TX port, please connect together
20, 21	ANT	Antenna port (RF common port), please connect together
27, 28	RX	RX port, please connect together
17	LT	Tuning inductor connection, TX side of the TX series switch[3]
18	LC	Tuning inductor connection, ANT side of the TX series switch[3]
12, 15, 19, 22, 26, 29	NC	No internal connection. Do not connect, not even to ground: needed for wider clearance and creepage distance
4–11, 16, 23–25, 30–32	GND	Connect to ground[2]
33 [1]	GND	Ground thermal pad, please connect to GND

[1] The backside ground (thermal) pad of the package must be grounded directly to the ground plane of PCB with multiple vias, and adequate heat sinking must be used to ensure proper operation and thermal management.
[2] These pins are NC pins inside the package. To avoid floating pins around RF lines, we request these to be connected to ground.
[3] An external inductor L_T between pins 17 and 18 creates a notch in the isolation curve, see Theory of Operation. Leave pins 17 and 18 open when the tuning inductor is not used.

©2024-2026 TagoreTech Inc.

Absolute Maximum Ratings

Table 4: Absolute Maximum Ratings $T_A = +25$°C unless otherwise specified[1].

Parameter	Symbol	Value	Unit
Electrical Ratings			
Power Supply Voltage	V_{DD}	5.5	V
External bias voltage on V_{CP} pin	V_{CP}	-20	V
Storage Temperature Range	T_{st}	−55 – 125	°C
Operating Temperature Range	T_{op}	−40 – 85	°C
Maximum Junction Temperature	T_j	+140	°C
RF input power CW, $T_{case} = +85$°C, 915 MHz	TX / ANT	400 (56 dBm)	W
Thermal Ratings			
Thermal Resistance (junction-to-case) – Bottom side	$R_{\theta jc}$	3.5	°C/W
Soldering Temperature	T_{solder}	+260	°C
ESD Ratings			
Human Body Model (HBM)	Level 1B	500 – <1000	V
Charged Device Model (CDM)	Level C3	≥1000	V
Moisture Rating			
Moisture Sensitivity Level[2]	MSL	1	

[1] Maximum ratings are absolute ratings. Exposure to absolute maximum rating conditions for extended periods may affect device reliability and can cause permanent damage to the device. Exceeding one or a combination of the absolute maximum ratings may cause permanent and irreversible damage to the device and/or to surrounding circuit. Functional operation of the device is not implied in any conditions above those indicated in the Electrical Specifications section.

[2] Tagore recommends to store parts in moisture barrier bag to preserve solderability.

©2024-2026 TagoreTech Inc.

Electrical Specifications

©2024-2026 TagoreTech Inc.

Table 5: Electrical Specifications $T_A = +25°C; V_{DD} = +2.7V; 50\Omega$ Source/Load.

Parameter	Condition	Minimum	Typical	Maximum	Unit
Operating frequency[1]	f	500		4000	MHz
Insertion loss, TX	500 MHz		0.21		dB
$ANT - TX$	915 MHz		0.26		dB
	1030–1090 MHz, IDX07[2]		0.26		dB
	2.4–2.8 GHz, IDX01[2]		0.37		dB
	3.3–3.8 GHz, IDX02[2]		0.53		dB
Insertion loss, RX	500 MHz		0.63		dB
$ANT - RX$	915 MHz		0.72		dB
	1030–1090 MHz, IDX07[2]		0.65		dB
	2.4–2.8 GHz, IDX01[2]		0.82		dB
	3.3–3.8 GHz, IDX02[2]		0.81		dB
Isolation	500 MHz		24		dB
$ANT - TX$	915 MHz		19		dB
	1030–1090 MHz, IDX07[2]		37		dB
	2.4–2.8 GHz, IDX01[2]		27		dB
	3.3–3.8 GHz, IDX02[2]		23		dB
Isolation	500 MHz		59		dB
$ANT - RX$	915 MHz		53		dB
	1030–1090 MHz, IDX07[2]		54		dB
	2.4–2.8 GHz, IDX01[2]		41		dB
	3.3–3.8 GHz, IDX02[2]		36		dB
Return loss	500 MHz		-23		dB
$ANT - TX$ ON[3]	915 MHz		-19		dB
	1030–1090 MHz, IDX07[2]		-20		dB
	2.4–2.8 GHz, IDX01[2]		-23		dB
	3.3–3.8 GHz, IDX02[2]		-17		dB
Return loss	500 MHz		-22		dB
$ANT - RX$ ON[3]	915 MHz		-20		dB
	1030–1090 MHz, IDX07[2]		-23		dB
	2.4–2.8 GHz, IDX01[2]		-18		dB
	3.3–3.8 GHz, IDX02[2]		-19		dB

[1] No external DC blocking capacitors are required on RF pins unless DC voltage is applied on a RF pin. 500 and 915 MHz: EVB without matching components (IDX00).
[2] Matching example with the tuning inductor L_T, see Schematics and Evaluation Board; worst case over the band. Matched values are not guaranteed as they include performance of matching components. These components are beyond control of TagoreTech and therefore given values are indications, not guaranteed values.
[3] Return loss of the ANT port and the active RF port in the given switch state, worst of the two ports.

©2024-2026 TagoreTech Inc.

Table 6: Electrical Specifications $T_A = +25°C; V_{DD} = +2.7V; 50\Omega$ Source/Load.

Parameter	Condition	Minimum	Typical	Maximum	Unit
Operating frequency	f	500		4000	MHz
Power and Compression point					
$P_{0.1dB}$ TX[1]	915 MHz, CW (250 W)		>54		dBm
$P_{pulse0.1dB}$ TX[1]	915 MHz, 20% duty cycle, 2.0 ms pulse (400 W)		>56		dBm
$P_{pulse0.1dB}$ TX[1]	3500 MHz, 20% duty cycle, 2.0 ms pulse (400 W)		56		dBm
P_{peak} TX[2]	1% duty cycle, LTE / 5G (631 W)	58			dBm
$P_{0.1dB}$ RX[1]	500 MHz to 4.0 GHz, CW	39	41.5		dBm
Switching Time[3]					
t_{ON}	50% ctrl to 90% of RF value, RX / TX		0.74 / 0.75		μs
t_{OFF}	50% ctrl to 10% of RF value, RX / TX		0.42 / 0.84		μs
t_{RISE}	10% to 90% of RF value, RX / TX		0.36 / 0.12		μs
t_{FALL}	90% to 10% of RF value, RX / TX		0.36 / 0.73		μs
Power Supply, DC					
Control voltage	Power Supply V_{DD}	2.6	3.3	5.25	V
	Control pin high[4], V_{ih}	1.0	3.3	5.25	V
	Control pin low, V_{il}	-0.3		0.5	V
Control current	Control pin high, I_{ih}			7.5	μA
	Control pin low, I_{il}		0		μA
Current consumption	I_{DD}, active mode (V_{DD} on)		160	200	μA

[1] $P_{0.1dB}$ is a figure of merit. Please do not exceed Absolute Maximum ratings.
[2] Peak power with 1% duty cycle, for example the envelope peaks of LTE and 5G signals at the TX port: the TS8728N withstands at least 58 dBm (631 W_{peak}).
[3] $C_{VCP} = 100$ nF, internal charge pump.
[4] Control voltage V_{ih} cannot be higher than V_{DD} (to avoid forward biasing of ESD diode)

©2024-2026 TagoreTech Inc.

Switching time definition

Example of the definition by using 10 W/40 dBm signal. We apply 10W signal to RF port, stabilized with isolator. Isolator is needed as our switch shows to RF port approximately 4Ω impedance. Let's assume that the switch insertion loss is 0.3 dB. Therefore 90% of the RF signal is 39.55 dBm and 10% of the RF signal is 1W/30dBm. We need to take into account 0.3dB insertion loss, therefore numbers are 39.25 dBm and 29.7 dBm respectively. We change the control from low to high and our time reference point is when our control signal exceeds lower threshold value V_{ihlow}. In certain measurements when control signal rise time is significantly shorter than RF output signal, we approximate start of the clock with 50% point of the control signal.

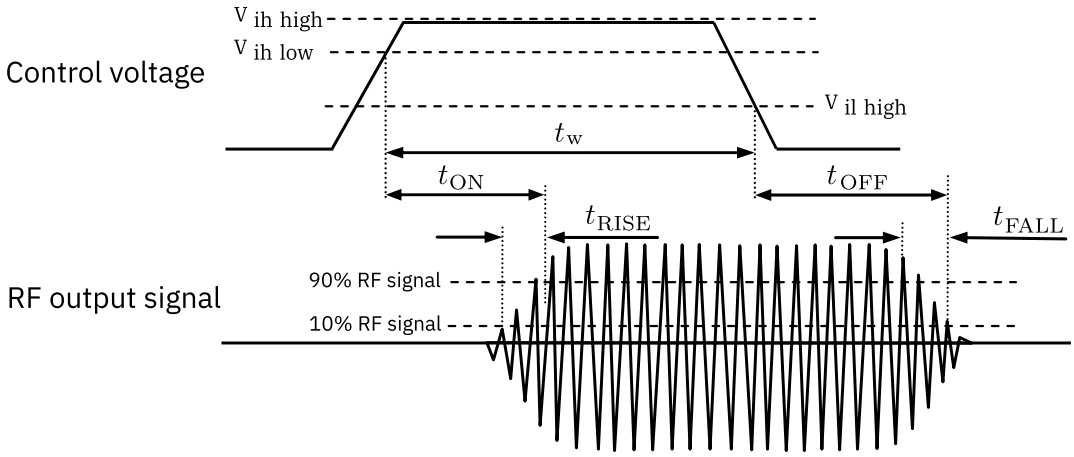

Figure 4: Switching time definition, t_{ON}, t_{OFF}, t_{RISE}, t_{FALL}. Minimum pulse width t_w.

Our component uses integrated charge pump. The switching times of the TS8728N are given with $C_{VCP} = 100$ nF on the V_{CP} pin.

©2024-2026 TagoreTech Inc.

Switch Control table

Table 7: Switch Control Table

V_{DD}[1]	V_1	**Switch state**
1	0	$ANT - RX$ ON[2], TX series switch OFF
1	1	$ANT - TX$ ON, RX series switch OFF and RX shunt switch ON

[1] V_{DD} should be applied first before V_1, otherwise may cause damage to the device.
[2] There is an internal pull-down to ground on the V_1 control pin, the state at start-up without any control voltage applied will be $ANT - RX$ ON.

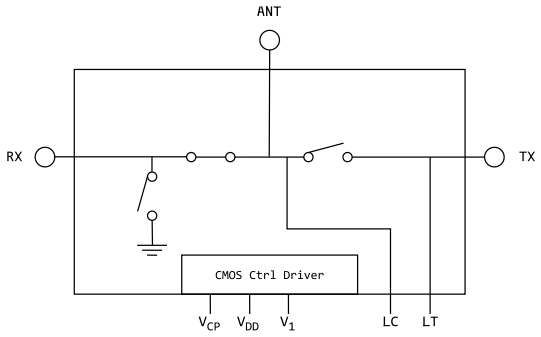

ANT-RX ON ($V_1 = 0$)

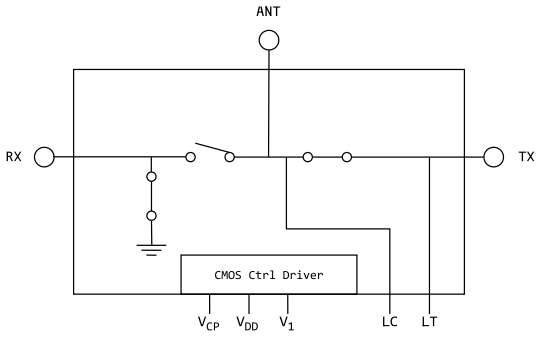

ANT-TX ON ($V_1 = 1$)

©2024-2026 TagoreTech Inc.

Theory of Operation

Asymmetrical switch topology

The TS8728N is an asymmetrical SPDT switch optimized for transmit/receive switching. The TX branch between ANT and TX has a series switch only. Without a shunt switch on the TX side, the insertion loss of the TX path is low (0.26 dB at 915 MHz) and the TX path handles high power: 400 W pulse power with 20 % duty cycle and 2.0 ms pulse width, and a peak power of at least 631 W (58 dBm) with 1 % duty cycle, for example with LTE and 5G signals. The RX branch between ANT and RX has a series switch and a shunt switch. In the ANT-TX ON state, the RX series switch is open and the RX shunt switch connects the RX port to ground, which gives high ANT-RX isolation (53 dB at 915 MHz) to protect the receiver. In the ANT-RX ON state, the TX series switch is open; as the TX branch has no shunt switch, the ANT-TX isolation is lower (19 dB at 915 MHz).

Tuning inductor and isolation notch

Pins 17 (LT) and 18 (LC) are connections for an external tuning inductor L_T across the TX series switch. The tuning inductor tunes out the capacitance of the open TX branch: it creates a notch in the ANT-TX isolation curve, and the notch frequency is set by the inductance. Choose L_T for the desired frequency range first, and design the matching networks with the chosen L_T in place. The matching examples of this datasheet show the effect: without L_T the ANT-TX isolation is 18 dB at 1060 MHz, with $L_T = 56$ nH (IDX07) it is 41 dB; $L_T = 8.0$ nH (IDX01) gives 35 dB at 2.6 GHz and $L_T = 4.4$ nH (IDX02) 26 dB at 3.55 GHz. When the tuning inductor is not used, pins 17 and 18 are left open.

Application Information

TS8728N is offering 400 W pulse power capability with 20 % duty cycle and 2.0 ms pulse width from 500 MHz to 4.0 GHz. Applications include L-band and S-band radar, IFF/SSR and LTE and 5G transmit/receive switching; the peak power capability is at least 631 W (58 dBm) with 1 % duty cycle, for example with LTE and 5G signals. In the past, such applications were covered with power hungry and complex PIN diodes, TS8728N significantly reduces design complexity for such RF switching needs. Below 1 GHz the switch works without matching components. For the bands 1030 to 1090 MHz (IFF/SSR), 2.4 to 2.8 GHz and 3.3 to 3.8 GHz the datasheet provides matching examples with the tuning inductor (IDX07, IDX01 and IDX02).

©2024-2026 TagoreTech Inc.

Schematics and Evaluation Board

S-parameters of all presented EVB configurations (IDX00, IDX01, IDX02 and IDX07) can be downloaded from this link: Download TS8728N S-parameters

Table 8: Port definitions in s-parameter files and plots.

PIN name	Port numbers	S-parameters	Function
ANT	1	S11	
RX (RF1)	2	S22	
TX (RF2)	3	S33	
RXON (RF1ON)	12	S21	ANT-RX ON
TXON (RF2ON)	13	S31	ANT-TX ON

Content of s-parameter repository:

```
TS8728N.zip
└── TS8728N
    ├── TS8728N_IDX00 ..... IDX00, no matching components
    │   ├── Readme.txt ..... matching network description
    │   ├── TS8728N_RF1ON_3PORT.s3p ..... S3P file for ANT-RX ON mode
    │   └── TS8728N_RF2ON_3PORT.s3p ..... S3P file for ANT-TX ON mode
    ├── TS8728N_IDX01_2400MHz_2800MHz ..... IDX01, LT 8.0 nH, 2.4 to 2.8 GHz
    │   ├── Readme.txt ..... matching network description
    │   ├── TS8728N_RF1ON_3PORT.s3p ..... S3P file for ANT-RX ON mode
    │   └── TS8728N_RF2ON_3PORT.s3p ..... S3P file for ANT-TX ON mode
    ├── TS8728N_IDX02_3300MHz_3800MHz ..... IDX02, LT 4.4 nH, 3.3 to 3.8 GHz
    │   ├── Readme.txt ..... matching network description
    │   ├── TS8728N_RF1ON_3PORT.s3p ..... S3P file for ANT-RX ON mode
    │   └── TS8728N_RF2ON_3PORT.s3p ..... S3P file for ANT-TX ON mode
    └── TS8728N_IDX07_1030MHz_1090MHz ..... IDX07, LT 56 nH, 1030 to 1090 MHz
        ├── Readme.txt ..... matching network description
        ├── TS8728N_RF1ON_3PORT.s3p ..... S3P file for ANT-RX ON mode
        └── TS8728N_RF2ON_3PORT.s3p ..... S3P file for ANT-TX ON mode
```


©2024-2026 TagoreTech Inc.

Unmatched EVB (IDX00), up to 1.0 GHz

TS8728N works without matching components below 1.0 GHz. Only two external components are recommended, 100 nF for V_{CP} and 10 nF for V_{DD} lines for supporting charge pump and power supply. Pins 17 and 18 are left open. The NC pins next to the RF pins (12, 15, 19, 22, 26 and 29) are not connected on the EVB, not even to ground. Leaving these pins unconnected gives the wider clearance and creepage distance around the RF pins that is needed at high RF voltages. On the EVB, the RX port is the connector RF1 and the TX port is the connector RF2; the plots use the same names.

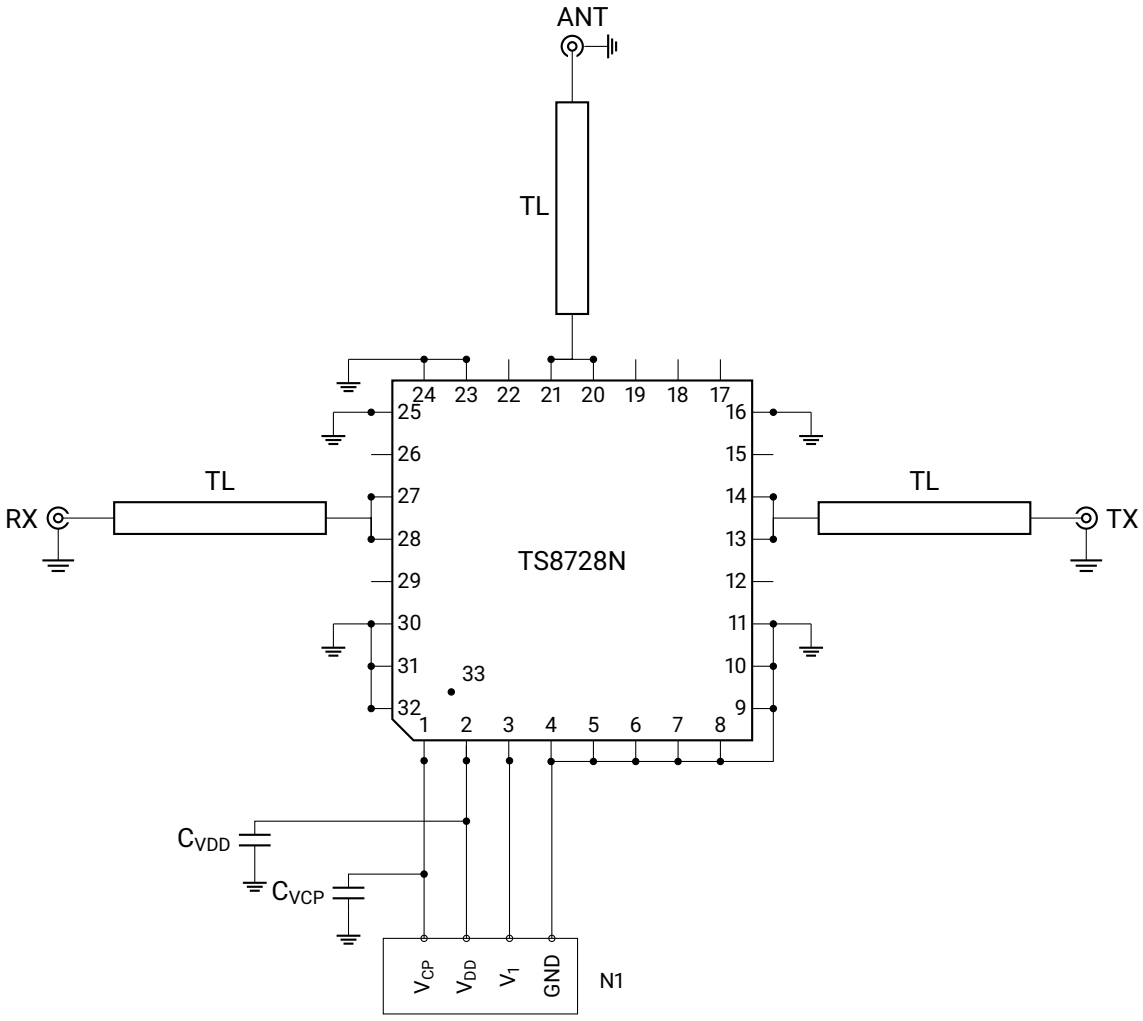

Schematics of TS8728N EVB without matching components

Table 9: Components used for TS8728N EVB

Reference	Part number / Value	Description	Notes
C_{VDD}	10 nF	Capacitor	GRM155R71H103KA88
C_{VCP}	100 nF	Capacitor	GRM155R61E104KA87D

Pin 33 is the center pad of the device. Multiple plugged through-hole vias should be added on this ground pad and adequate heat sinking should be used.

The purpose of the connection between V_{CP} and connector N1 is to monitor V_{CP}, do not apply an external voltage to V_{CP}.

©2024-2026 TagoreTech Inc.

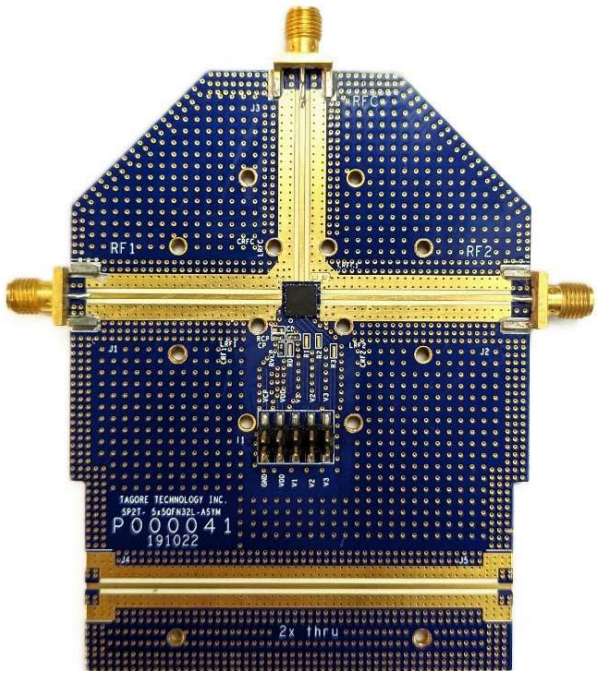

Photo of TS8728N EVB

©2024-2026 TagoreTech Inc.

Matching examples (IDX07, IDX01, IDX02)

The matching examples use the same EVB as the unmatched configuration. The tuning inductor L_T between pins 17 and 18 sets the ANT-TX isolation notch to the band; choose L_T first and design the matching networks with L_T in place. The matching elements are a shunt element M_{0a} at the ANT port and a shunt element M_{2a} at the TX port, placed at the CPW lengths T_{0a} and T_{2a} from the edge of the switch. The RX port is not matched. Positions not listed in Table 10 are not populated. Solder the matching components as close as possible to the pins of the switch.

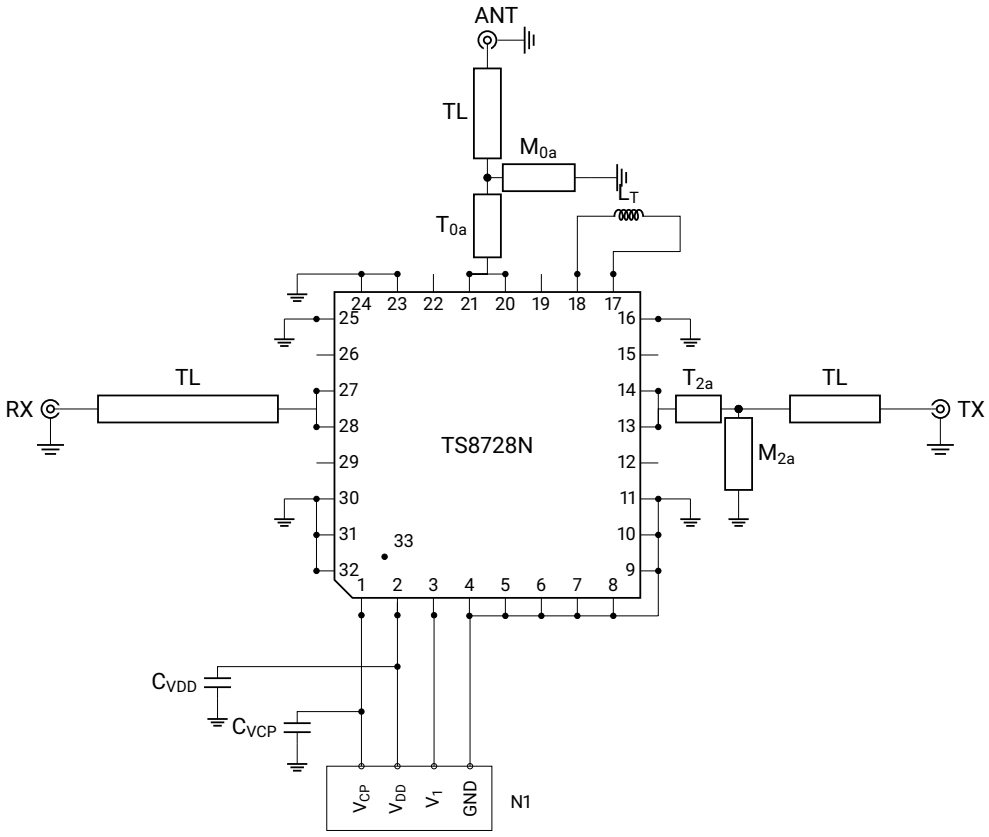

Schematics of TS8728N EVB with matching component positions

Table 10: Matching components used for IDX07, IDX01 and IDX02

Reference	IDX07 1030 to 1090 MHz	IDX01 2.4 to 2.8 GHz	IDX02 3.3 to 3.8 GHz
L_T	56 nH inductor	8.0 nH inductor	4.4 nH inductor, 0402DC-4N4X_R_
T_{0a}	–	12.3 mm[a]	7.5 mm[a]
M_{0a}	–	0.4 pF capacitor	0.5 pF capacitor, 0603N0R5BW251
T_{2a}	as close as possible[b]	11.2 mm[a]	7.6 mm[a]
M_{2a}	27 nH inductor	0.5 pF capacitor	0.5 pF capacitor, 0603N0R5BW251
C_{VDD}	10 nF, GRM155R71H103KA88		
C_{VCP}	100 nF, GRM155R61E104KA87D		

[a] PCB transmission line (CPW) length from the IC reference plane (edge of the switch).
[b] Shunt inductor soldered as close as possible to the TX pins.

©2024-2026 TagoreTech Inc.

Typical characteristics

Performance up to 2.0 GHz, unmatched (IDX00)

These measurements were obtained using the TS8728N EVB without matching components (IDX00), with CPW losses de-embedded. Without matching components the switch is used up to 1.0 GHz. At 915 MHz the TX insertion loss is 0.26 dB and the RX insertion loss 0.72 dB, the ANT-RX isolation is 53 dB and the ANT-TX isolation 19 dB. The plots extend to 2.0 GHz, where the RX insertion loss exceeds 1 dB.

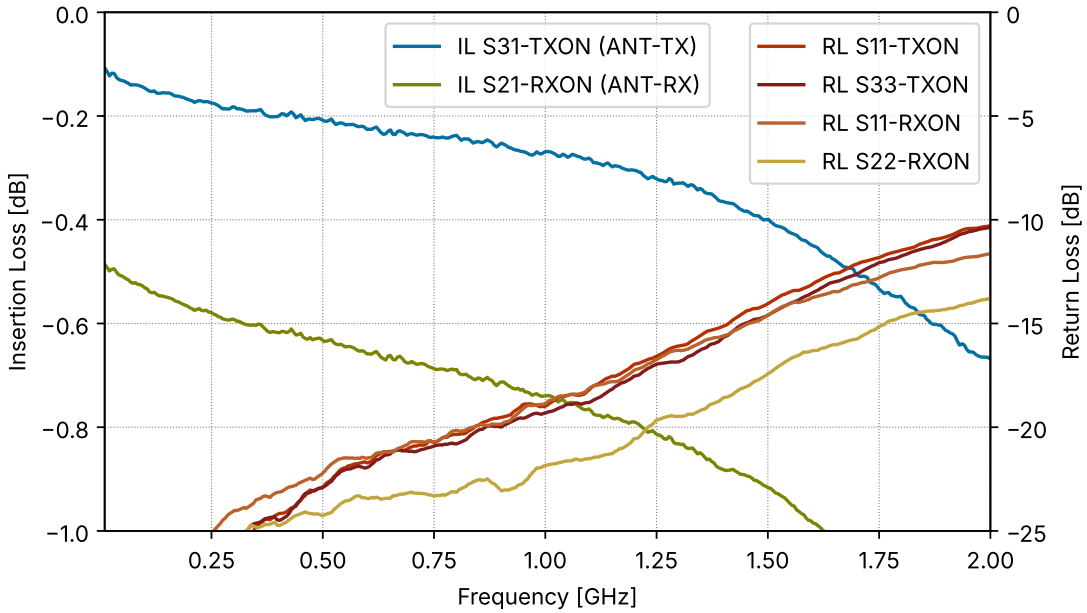

Insertion loss and return loss.

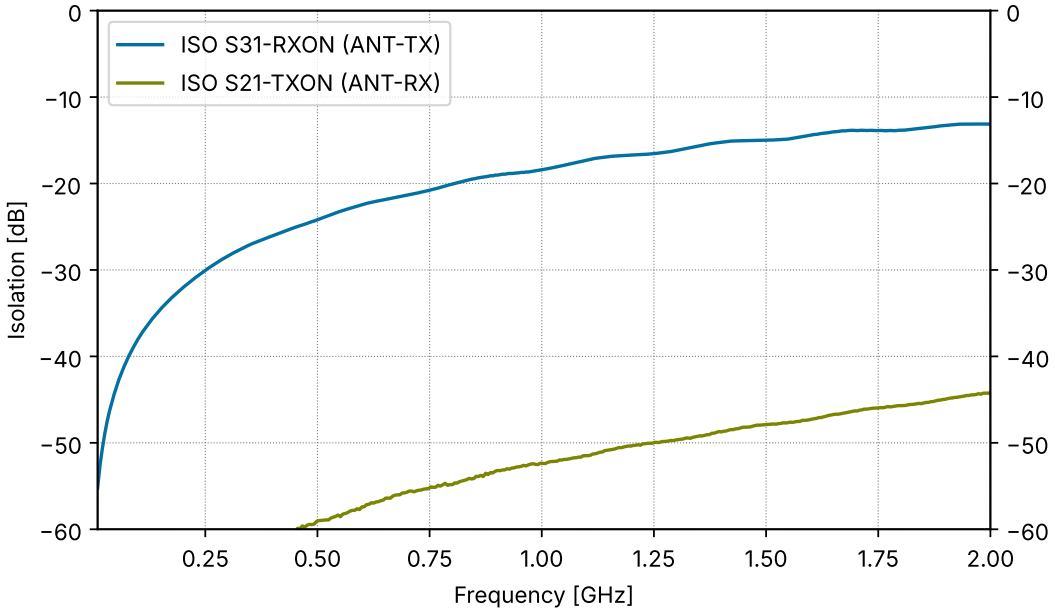

Isolation of the non-active port, ANT-TX in the ANT-RX ON state and ANT-RX in the ANT-TX ON state.

©2024-2026 TagoreTech Inc.

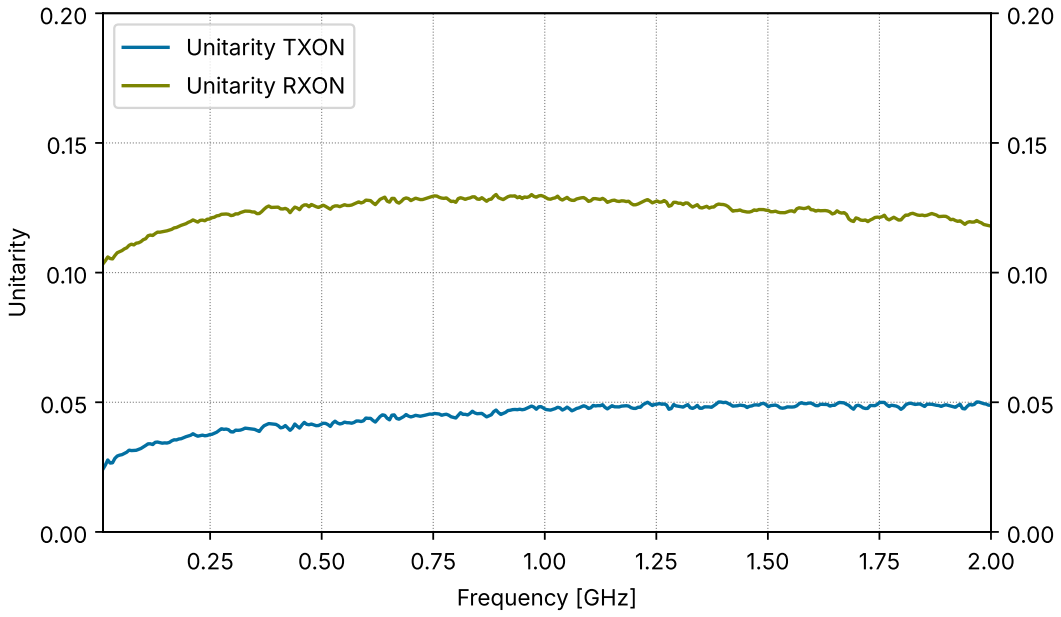

Unitarity, power absorption of the component, $1 - |S_{11}|^2 - |S_{21}|^2 - |S_{31}|^2$.

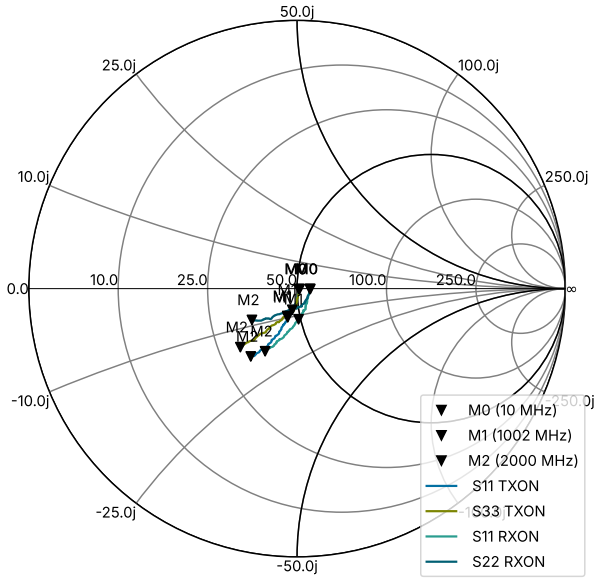

Matching of the active ports

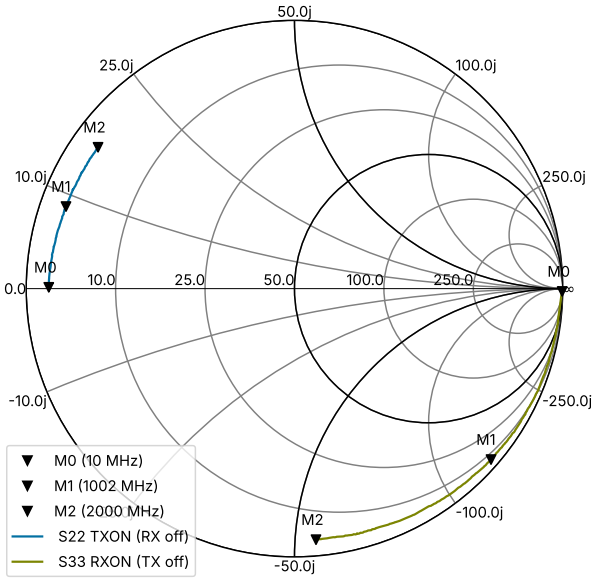

Termination impedance of the non-active port

©2024-2026 TagoreTech Inc.

Performance 1030 to 1090 MHz, matched (IDX07)

These measurements were obtained using the TS8728N EVB with the IDX07 matching components ($L_T = 56$ nH, Table 10), including the losses of the matching components. The operating band 1030 to 1090 MHz (IFF/SSR) is shaded grey. Over the band the TX insertion loss is at most 0.26 dB, the ANT-RX isolation at least 54 dB and the ANT-TX isolation at least 37 dB, with the isolation notch at 1.05 GHz.

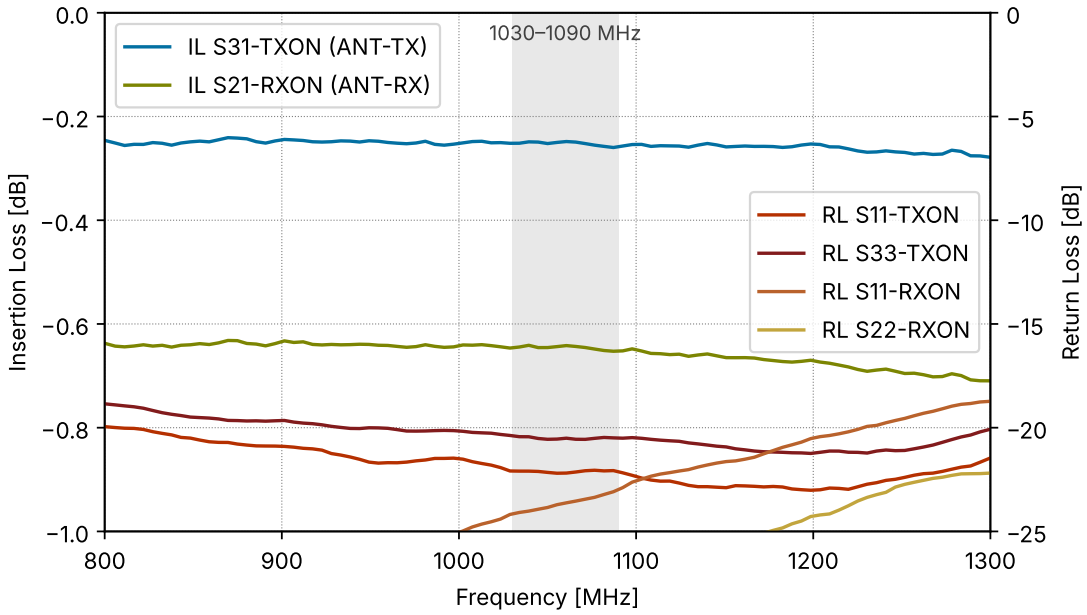

Insertion loss and return loss, IDX07.

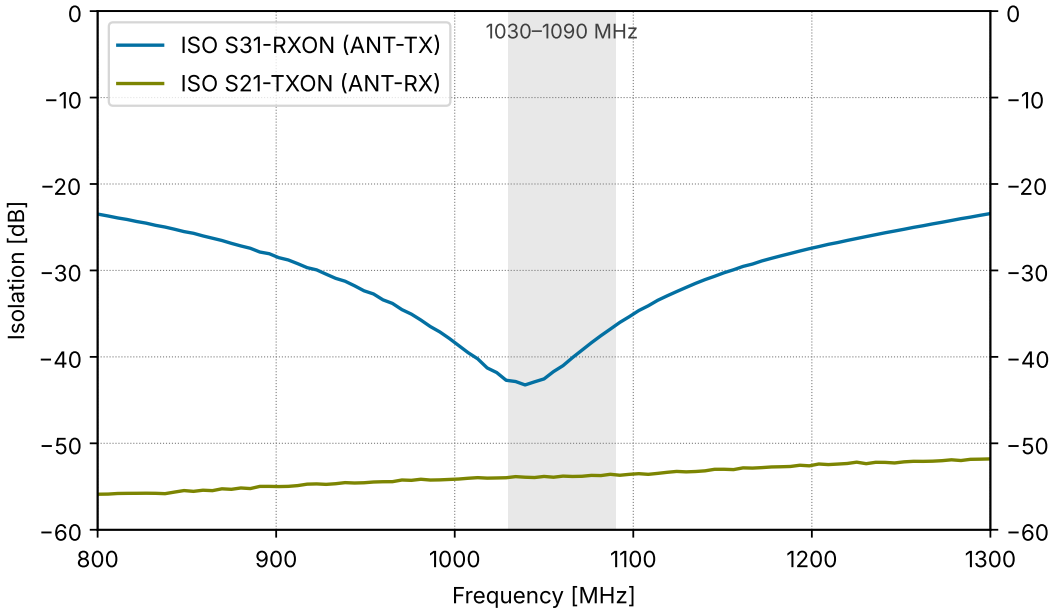

Isolation of the non-active port, ANT-TX in the ANT-RX ON state and ANT-RX in the ANT-TX ON state, IDX07.

©2024-2026 TagoreTech Inc.

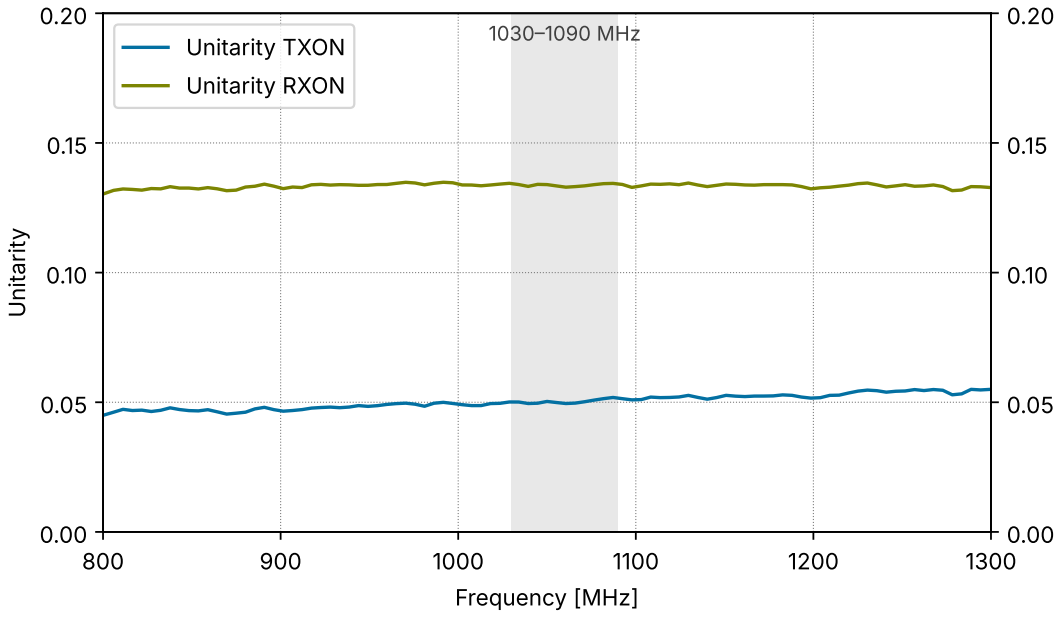

Unitarity, power absorption of the component, $1 - |S_{11}|^2 - |S_{21}|^2 - |S_{31}|^2$, IDX07.

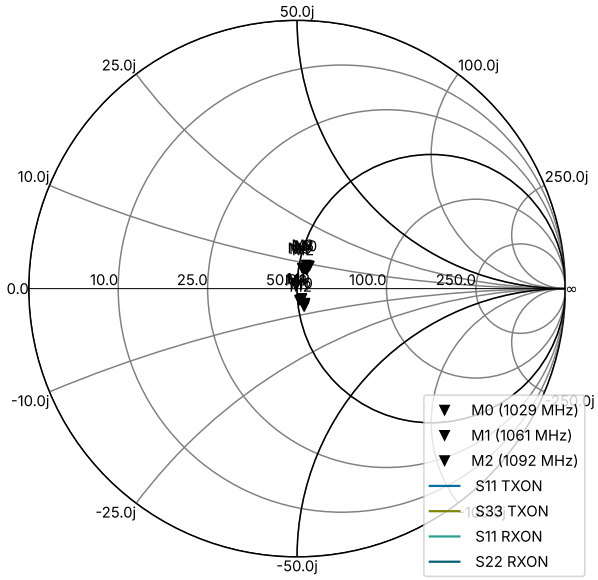

Matching of the active ports

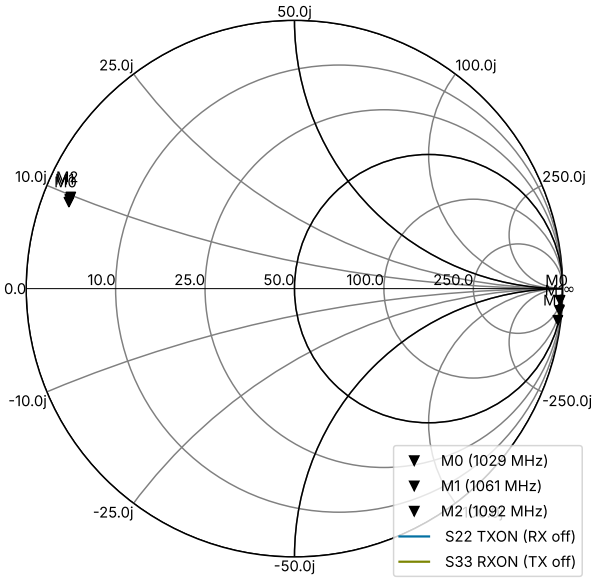

Termination impedance of the non-active port

©2024-2026 TagoreTech Inc.

Performance 2.4 to 2.8 GHz, matched (IDX01)

These measurements were obtained using the TS8728N EVB with the IDX01 matching components ($L_T = 8.0$ nH, Table 10), including the losses of the matching components. The operating band 2.4 to 2.8 GHz is shaded grey. Over the band the TX insertion loss is at most 0.37 dB, the ANT-RX isolation at least 41 dB and the ANT-TX isolation at least 27 dB, with the isolation notch at 2.6 GHz.

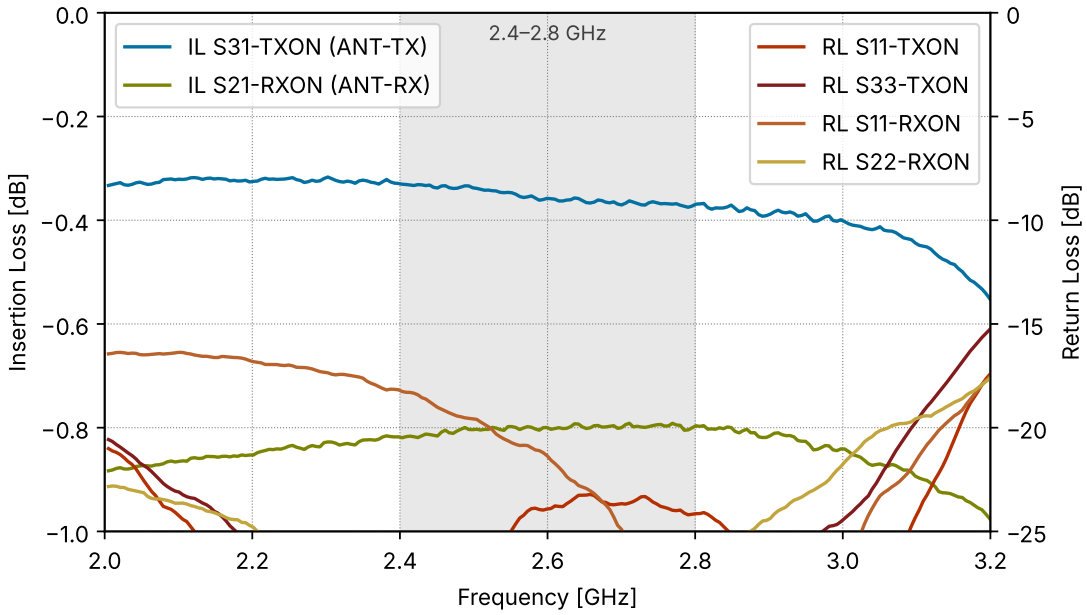

Insertion loss and return loss, IDX01.

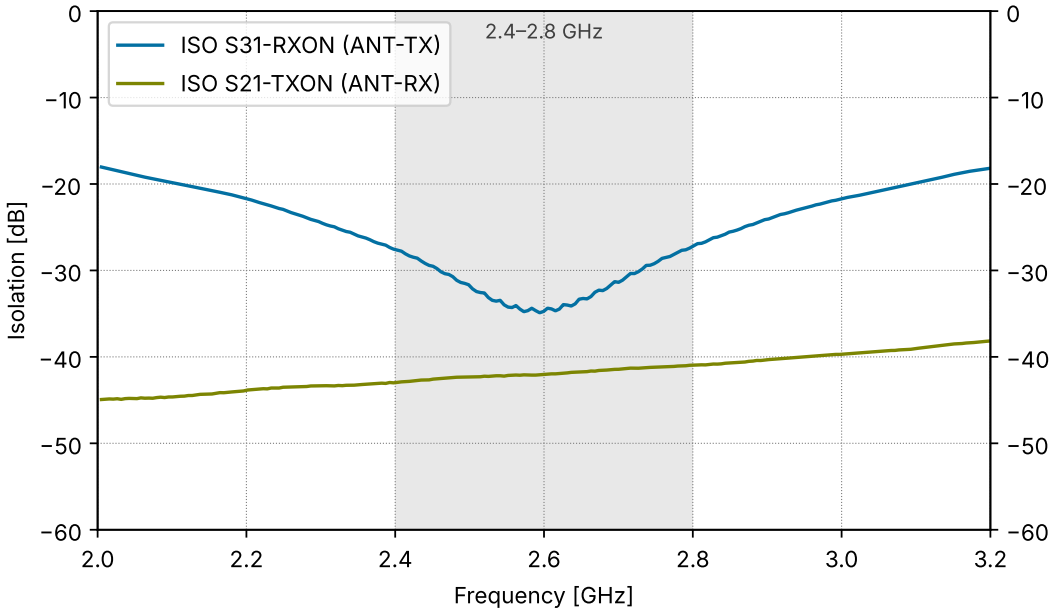

Isolation of the non-active port, ANT-TX in the ANT-RX ON state and ANT-RX in the ANT-TX ON state, IDX01.

©2024-2026 TagoreTech Inc.

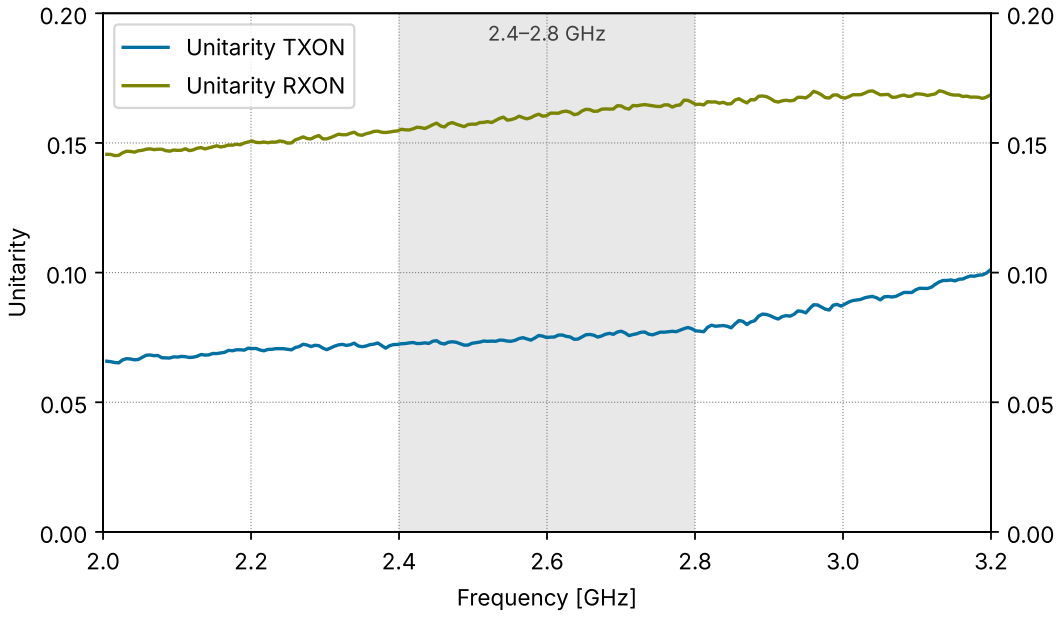

Unitarity, power absorption of the component, $1 - |S_{11}|^2 - |S_{21}|^2 - |S_{31}|^2$, IDX01.

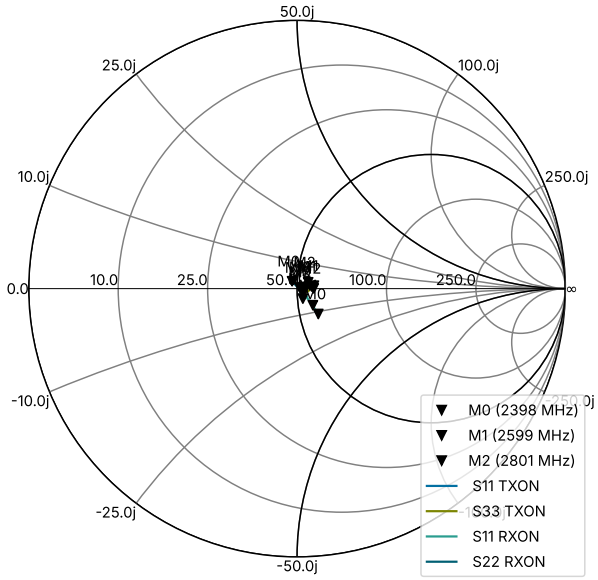

Matching of the active ports

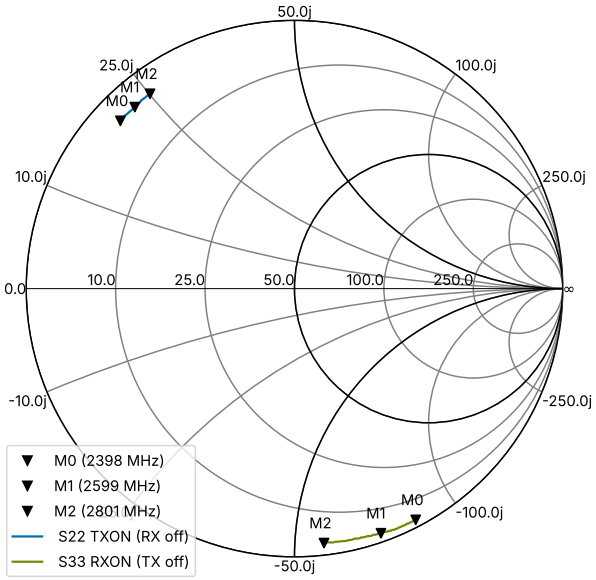

Termination impedance of the non-active port

©2024-2026 TagoreTech Inc.

Performance 3.3 to 3.8 GHz, matched (IDX02)

These measurements were obtained using the TS8728N EVB with the IDX02 matching components ($L_T = 4.4$ nH, Table 10), including the losses of the matching components. The operating band 3.3 to 3.8 GHz is shaded grey. At 3.55 GHz the TX insertion loss is 0.40 dB, the ANT-RX isolation 38 dB and the ANT-TX isolation 26 dB; over the band the TX insertion loss is at most 0.53 dB (at 3.8 GHz).

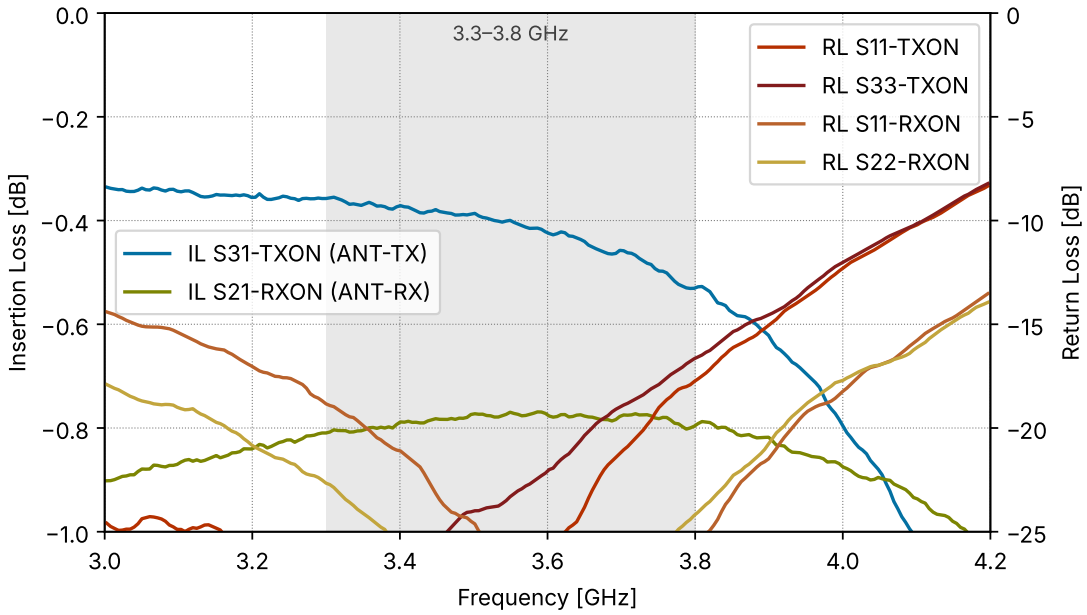

Insertion loss and return loss, IDX02.

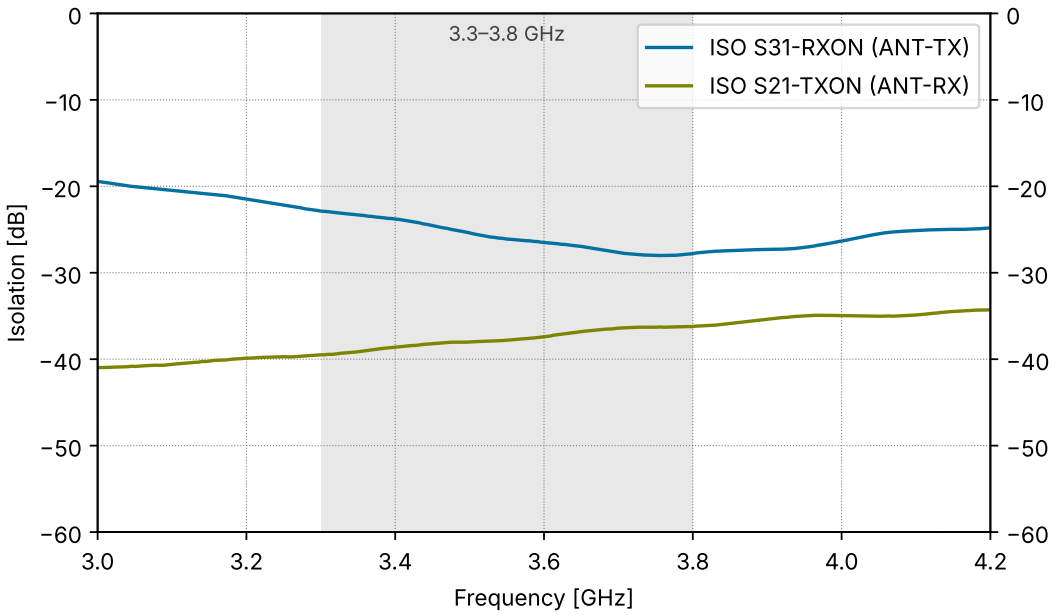

Isolation of the non-active port, ANT-TX in the ANT-RX ON state and ANT-RX in the ANT-TX ON state, IDX02.

©2024-2026 TagoreTech Inc.

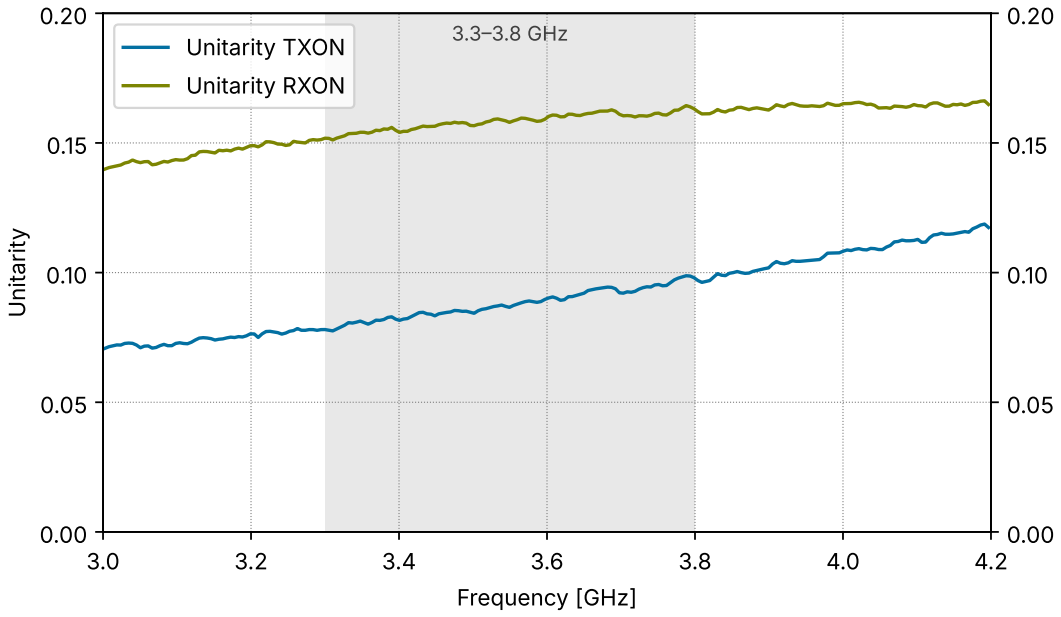

Unitarity, power absorption of the component, $1 - |S_{11}|^2 - |S_{21}|^2 - |S_{31}|^2$, IDX02.

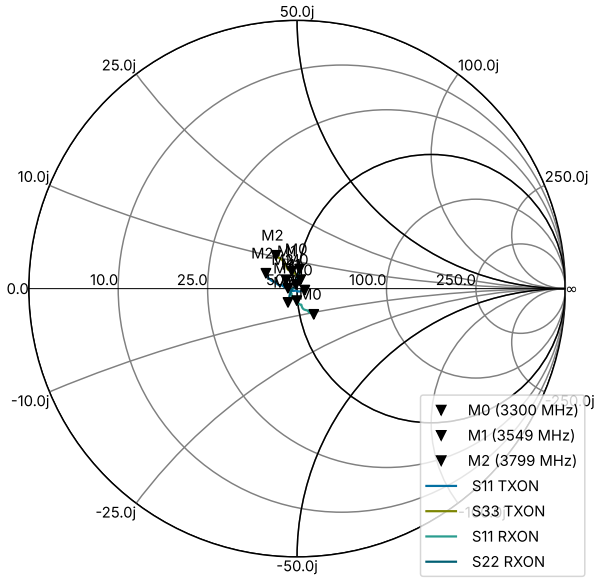

Matching of the active ports

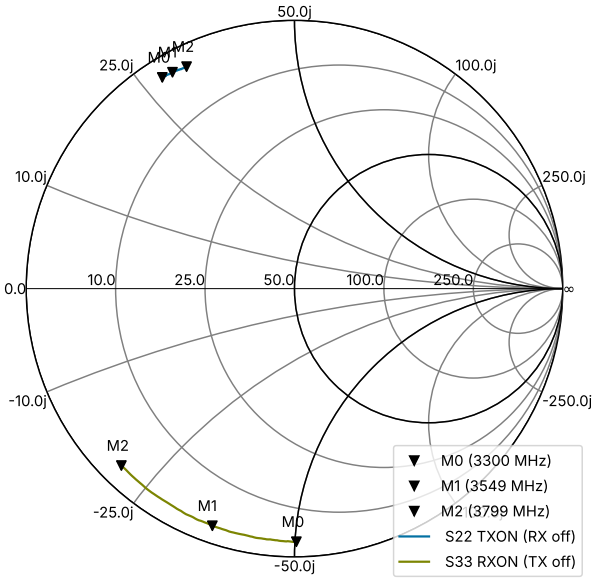

Termination impedance of the non-active port

©2024-2026 TagoreTech Inc.

Pulsed compression, 3500 MHz

Compression of the ANT-TX path measured at 3500 MHz with 20 % duty cycle and 2.0 ms pulse width (10 ms period) on three samples, using the EVB with the 3.3 to 3.8 GHz matching on a metal table, $C_{VCP} = 100$ nF, $T_A = +25$°C. Compression is referenced to the insertion loss at 40 dBm. Measurements are presented as dot (•) and the exponential model as line (–); all curves have the same shape (common exponential slope). At 400 W_{pulse} (56 dBm) the compression is 0.09 to 0.12 dB, and the model gives $P_{\mathrm{pulse\,0.1dB}}$ of 55.9 to 56.3 dBm.

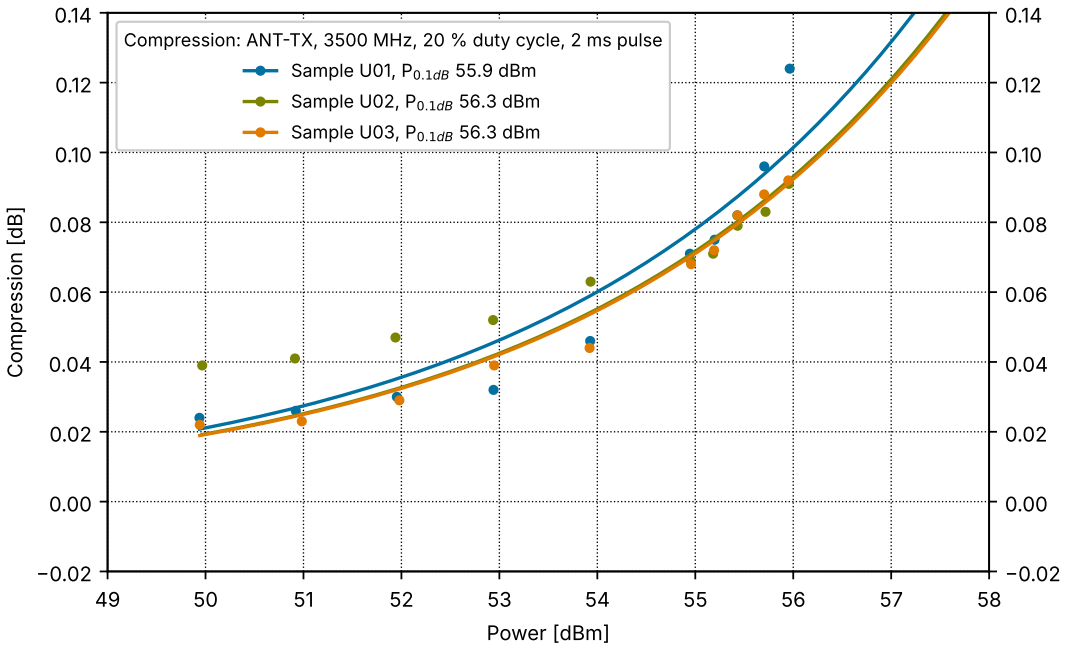

TS8728N pulsed compression measurement, ANT-TX, 3500 MHz, 20 % duty cycle, 2.0 ms pulse width.

©2024-2026 TagoreTech Inc.

Switching time

Switching time measurements of the TS8728N EVB with $C_{VCP} = 100$ nF. Typical values are given in the Electrical Specifications.



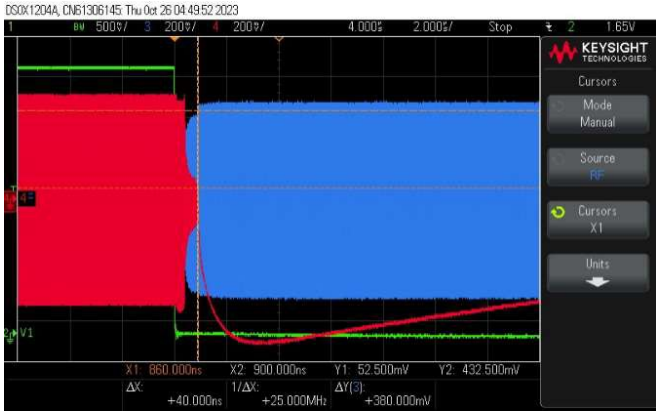

Switching time measurement, control signal and RF envelope.

©2024-2026 TagoreTech Inc.

Device Package information

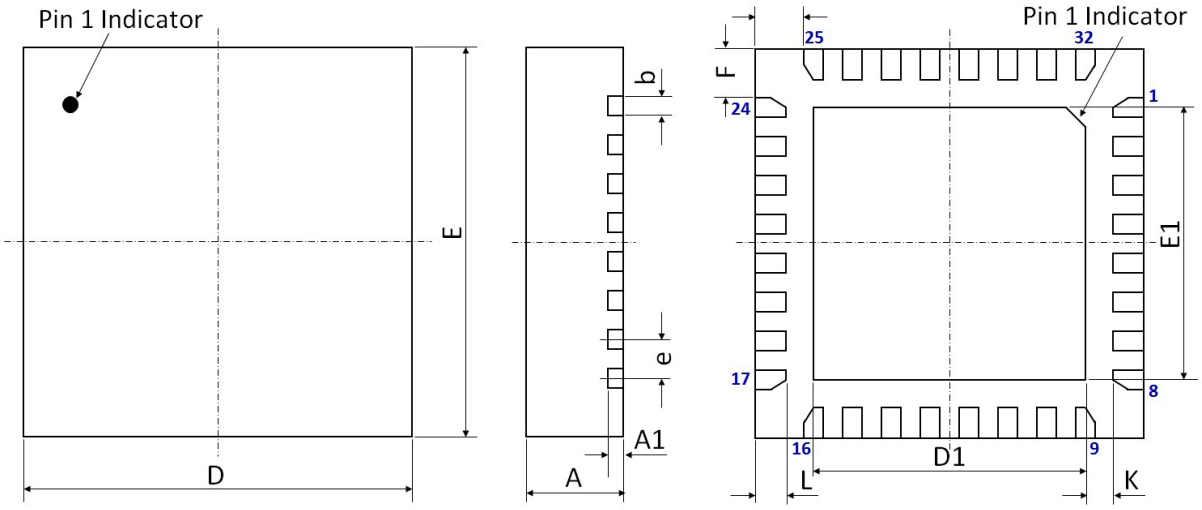

Figure 11: 32-pin QFN 5.0 x 5.0 x 0.75 mm^3 package drawing.

Please refer to application notes TN-001 PCB Design guideline and TN-002 Solder Rework at TagoreTech web page for PCB and soldering guidelines.

Table 11: Device Package Dimensions

Dimension	Value [mm]	Tolerance [mm]	Dimension	Value [mm]	Tolerance [mm]
A	0.75	±0.05	E	5.00 BSC	±0.05
A1	0.203	±0.02	E1	3.10	±0.06
b	0.25	+0.05/-0.07	F	0.625	±0.05
D	5.00 BSC	±0.05	G	0.625	±0.05
D1	3.10	±0.06	L	0.40	±0.05
e	0.50 BSC	±0.05	K	0.50	±0.05

Lead finish: pure Sn without underlayer; thickness 7.5 μm to 20 μm (typical 10 μm to 12 μm).

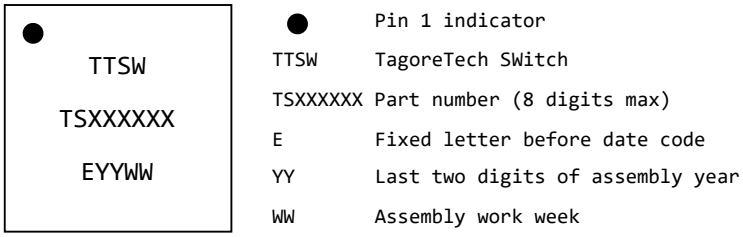

Figure 12: Part marking specification.

©2024-2026 TagoreTech Inc.

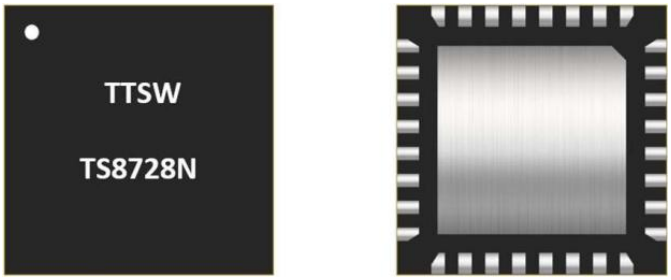

Figure 13: TS8728N photo, top and bottom side.

©2024-2026 TagoreTech Inc.

PCB Land Design

Notes:

- 4-layer PCB is recommended.
- Via diameter is recommended to be 0.2 mm to prevent solder wicking inside the vias.
- Thermal vias shall only be placed on the center pad.
- The maximum via number for the center pad is 5(X)×5(Y)=25.

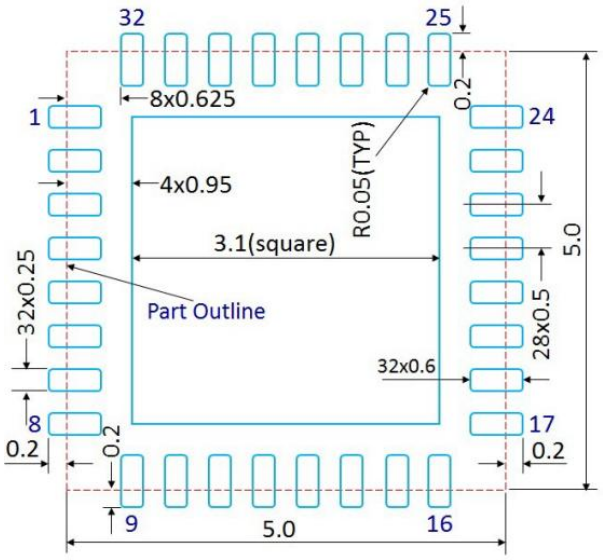

Figure 14: PCB land pattern, dimensions in [mm].



Figure 15: Solder mask pattern, non-solder mask defined (preferred, left) and solder mask defined (right), dimensions in [mm].

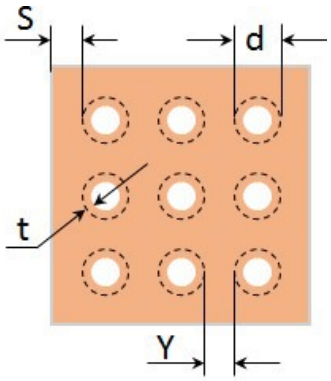

Figure 16: Thermal Via Pattern, Recommended Values: S≥0.15mm; Y≥0.20mm; d=0.2mm; Plating Thickness t=25μm or 50μm.

©2024-2026 TagoreTech Inc.

PCB Stencil Design

Notes:

- Laser-cut, stainless steel stencil is recommended with electro-polished trapezoidal walls to improve the paste release.
- Stencil thickness is recommended to be 125μm.

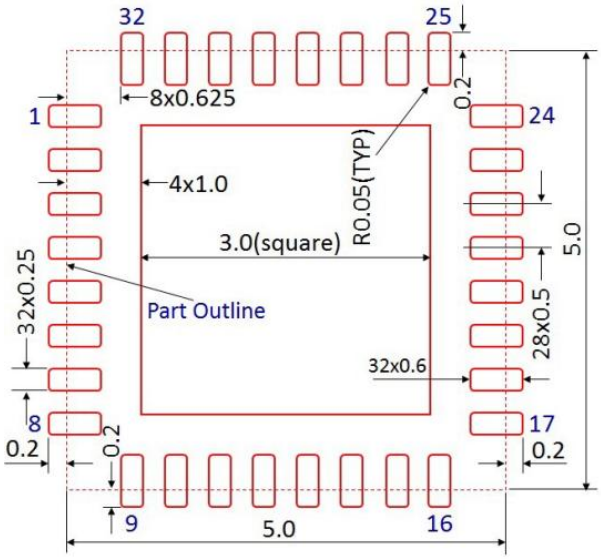

Figure 17: Stencil Openings, dimensions in [mm].

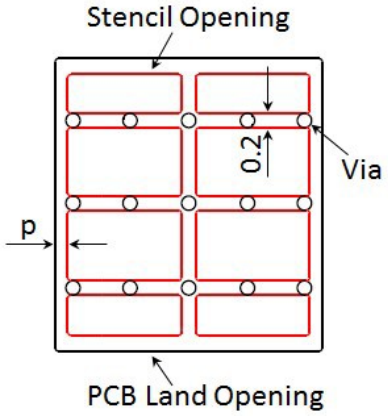

Figure 18: Stencil Openings Shall not Cover Via Areas If Possible, dimensions in [mm].

©2024-2026 TagoreTech Inc.

Tape and Reel Information

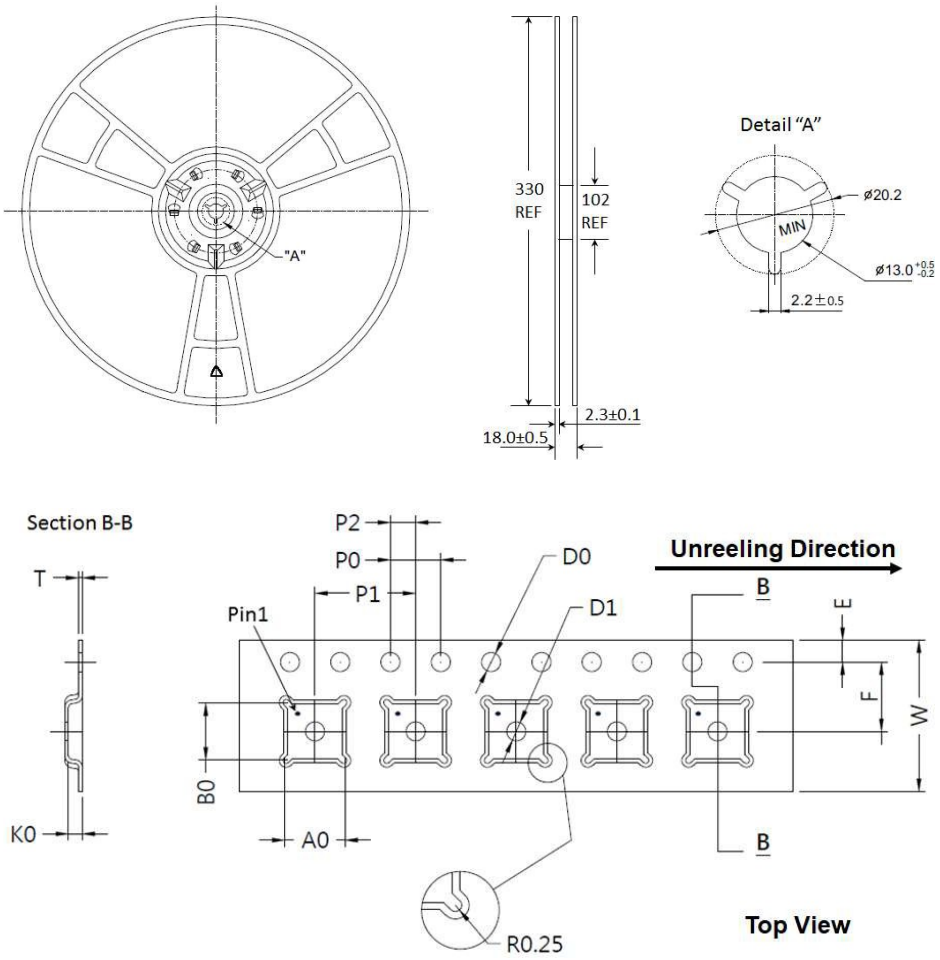

A0[mm]	B0[mm]	D0[mm]	D1[mm]	E[mm]	F[mm]	K0[mm]	P0[mm]	P1[mm]	P2[mm]	T[mm]	W[mm]
5.25	5.25	1.50	1.50	1.75	5.50	1.10	4.00	8.00	2.00	0.30	12.00

©2024-2026 TagoreTech Inc.

Glossary

IL	Insertion loss
ISO	Isolation
RL	Return loss
VSWR	Voltage Standing Wave Ratio
ANT	Antenna port, RF common port
TX	Transmit port
RX	Receive port
L_T	External tuning inductor between pins 17 (LT) and 18 (LC)
CPW	Coplanar waveguide
IDX	EVB configuration index of the S-parameter files (IDX00 unmatched, IDX07, IDX01 and IDX02 matching examples)
Unitarity	Describes power absorption of the component, $1 - \lvert S_{11}\rvert^2 - \lvert S_{21}\rvert^2 - \lvert S_{31}\rvert^2$
IFF / SSR	Identification friend or foe / Secondary surveillance radar
LTE / 5G	Long Term Evolution / fifth generation mobile network (5G NR)
W_{pulse}	Pulse power: 20 % duty cycle, 2.0 ms pulse width
W_{peak}	Peak power: 1 % duty cycle, for example the envelope peaks of LTE and 5G signals

Changelog

Table 12: Changelog

Date	Revision	Notes
08/07/2025	2.2	Previous datasheet revision (Word).
10/28/2026	3.00	New release in the TagoreTech datasheet format. Asymmetrical topology described: TX branch series switch only, RX branch series and shunt switch. Tuning inductor pins 17 (LT) and 18 (LC) and the isolation notch described. Power ratings: 400 W_{pulse} (20 % duty cycle, 2.0 ms pulse width) and at least 631 W_{peak} (58 dBm, 1 % duty cycle, LTE / 5G). Functional diagram, pin assignment and switch-state drawings in the house style, EVB schematics redrawn. V_{CP} absolute maximum rating -20 V added. Units of the switching times corrected to μs. Pulsed compression measurement at 3500 MHz, 20 % duty cycle, 2.0 ms pulse width added. Typical characteristics of IDX00 and the matching examples IDX07 (1030 to 1090 MHz), IDX01 (2.4 to 2.8 GHz) and IDX02 (3.3 to 3.8 GHz) from the measured S-parameters, matching component table, S-parameter repository; insertion loss, isolation and return loss specifications and front-page values from the same data. Links to application notes TN-001/TN-002, distributor table, QR code link to the latest datasheet, glossary.

©2024-2026 TagoreTech Inc.

Legal Information

Published by

TagoreTech Inc.
601 Campus Drive, Suite B3
Arlington Heights, IL 60004, USA

©2024-2026 All Rights Reserved

TagoreTech is a fabless US semiconductor company specializing in GaN RF solutions: high-power RF switches in unique GaN-on-Si technology, RF power amplifiers in GaN-on-SiC, and reconfigurable front-end solutions — such as tunable power amplifiers and antenna tuning — that combine the two. TagoreTech serves defense, radar, datalink, 5G infrastructure, and public safety markets.

Legal Disclaimer

The information provided in this document is believed to be accurate and reliable, but shall in no event be regarded as a guarantee of conditions or characteristics. TagoreTech makes no warranties, express or implied, including without limitation any implied warranty of merchantability or fitness for a particular purpose. TagoreTech assumes no responsibility for the consequences of the use of this information, nor for any infringement of patents or other rights of third parties which may result from its use. No license is granted by implication or otherwise under any patent or patent rights of TagoreTech. Customers are responsible for validating the suitability of TagoreTech products in their own applications and for compliance with all applicable laws and regulations, including export control requirements. Specifications are subject to change without notice. Errors and omissions excepted.

Use in critical applications. TagoreTech products are not designed or authorized for use in life-support devices or systems, safety-critical applications, or applications where failure could reasonably be expected to cause personal injury, unless expressly agreed in writing by an authorized representative of TagoreTech. Any such use is at the customer's own risk.

Sales Contact

For further information on technology, delivery terms, conditions, and prices, please contact TagoreTech: support@tagoretech.com or contact our distributors or representatives as listed at TagoreTech website. Please click the blue links.

Buy TS8728N directly

DigiKey Digikey TS8728N

RichardsonRFPD An Arrow Company RFPD TS8728N

TS8728N Product Information

Please visit TS8728N product page for further information TS8728N Product Page

Latest version of TS8728N datasheet is available for download: TS8728N Datasheet

S-parameters of all presented EVB configurations are available: TS8728N S-parameters

TagoreTech Inc. Product Brochure and datasheets

Tagore Product Brochure and links to all available datasheets is available for download:
TagoreTech Product Brochure

Scan for the latest datasheet